ELECTRONICS
# sourcing
MARCH/APRIL 2022
EUROPE
AN MMG PUBLISHING TITLE

## DON'T GET TANGLED BY COMPONENT MANAGEMENT

PAGE 8

## On the cover – March/April 2022

Don't get tangled by component management
Page 8

# Editor's Word

## Rise of the repair

There are now generations of people moving through life with little or no concept of repair. Instead, when something breaks it is replaced. However, if people's desire for sustainability is genuine, then surely the idea of repairing a product once, twice or more must return.

In the electronics arena there are many barriers to repair. For example, manufacturers often don't design products to be repaired, refuse to publish official repair manuals and won't make spares available. Yet, as more manufacturers sign up to new environmental and greenhouse gas certifications, it's difficult to see how they can avoid addressing the issue for long.

Which brings me to the reason for writing this leader. Over the past few weeks, I've encountered a number of events relating to product repair. Firstly, bubbling away in the background, is right-to-repair legislation. Secondly, in this issue (quite by coincidence) John Denslinger's article is on sustainability. Thirdly, an article in a recent issue by an authorised aftermarket component manufacturer stated its expectation of repair related demand. Fourthly, I was surprised by an article about an electronic sub assembly who's USP was its repairability. Finally, I've started seeing adverts for domestic appliance repair services.

It's almost as if the idea of extending the useful life of an electronic product is limping back into fashion.

What does that mean for this industry? Well, if repair gains pace, at some point in the future high volume, low value component sales to offshore manufacturing centers will start to cede some ground to high value, low volume sales to local repair facilities.

Maybe, maybe not. Time will tell.

Jon Barrett

## Contact


ELECTRONICS sourcing

**EDITORIAL**
**Managing Editor:** Jon Barrett
jonb@electronics-sourcing.com
**Contributing Editor:** Amy Barker
amyb@electronics-sourcing.com
**Director of Media & Communications:**
Thomas Smart
thomas.smart@electronics-sourcing.com

**ADVERTISING**
**Director of Sales:** Emma Evernden
emma.evernden@electronics-sourcing.com

**DESIGN**
**Graphic Designer:** Katie Williams
katie.williams@electronics-sourcing.com

**CIRCULATION**
**Circulation Manager:** Vicky Leary
vicky.leary@electronics-sourcing.com
**Circulation Account Manager:** Liz Poole
liz.poole@electronics-sourcing.com

**PUBLISHER**
**Mark Leary**
mark.leary@electronics-sourcing.com
**Director of Operations:** Denise Pattenden
denise.pattenden@mmgpublishing.com

Issue 97, Vol.15 No.02

Published 6 times per year
by MMG Publishing Limited
ANNUAL SUBSCRIPTION:
EU Countries €60 Rest of World €150

MMG PUBLISHING LTD
Suite 2, 1-3 Warren Court, Park Road,
Crowborough, East Sussex TN6 2QX
Tel: +44 (0)1892 613400
Fax: +44 (0)1892 613402
Printed by: Pensord Press Ltd
Electronics Sourcing is printed on
sustainably sourced paper stock
ISSN 2043-9504

# N

## ES News

**View current editions online**

*www.electronics-sourcing.com*




## Buying into real-time location

Arrow Electronics has signed an agreement with Quuppa, a Finnish-headquartered specialist in real-time location systems (RTLS).

Quuppa's system provides tracking of tags and devices to within a few centimetres and with millisecond latency. The platform is used in indoor tracking applications including industrial, healthcare, retail and security environments.

The system features an open API that simplifies integration with existing and future systems. It has inbuilt telemetry and monitoring, which removes the need for active maintenance and, combined with the long-lasting tags and ease of deployment, minimises cost of ownership.

Quuppa's CEO, Sammy Loitto, said: "This is an exciting opportunity for us to expand the Quuppa customer base and sales reach via Arrow's network in the EMEA region."

Arrow Electronics' vice president product management and supplier marketing EMEA, Matthias Hutter, added: "Location services are being adopted across many markets and the addition of Quuppa's portfolio gives our customers further choice and flexibility in their product designs."

*fiveyearsout.com*

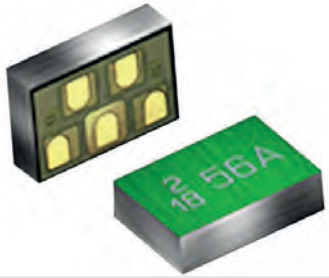

## EMI filters in stock

Mouser Electronics is now stocking Vishay Intertechnology's EMI256A-SD2 two-channel EMI filter. Engineered as a dual-channel filter array, the device helps suppress electromagnetic interference and radio frequency interference for two protection paths while providing robust system-level electrostatic discharge protection for interface line filtering.

Applications include smartphones, tablets, portable electronic devices, display interfaces, keypads and high-speed I/O data ports.

Clamping voltage is rated at ±30kV, helping prevent damage to the protected device when subjected to ESD pulses. The device has been tested per IEC 61000-4-2 standards, meeting ESD immunity requirements with ratings at ±25kV for both contact and air discharge. The filter also features a cut-off frequency of 60MHz (typical), a line resistance of 60Ω (typical), and an operating temperature of -40 to 150°C.

The filter is available in a 0.45mg, CLP1007-5M package that is designed to prevent device shorts while offering optimum stand-off and minimal tilt and rotation for space-sensitive devices. The filter meets UL94 flammability standard and has a moisture sensitivity level classified to level 1 according to J-STD-020.

*www.mouser.com*

## Same footprint, more power

Rutronik is supplying 5W board mount AC/DCs from Recom. The RAC05E-K series is compatible with existing 3W devices, while the RAC05E-KT series can replace EI30 transformers with additional rectification and smoothing circuitry.

Applications include industrial and building automation, ITE, office, domestic, IoT, test and measurement applications where a semi-regulated output is sufficient.

Both series achieve 5W in the same footprint as other 3W devices on the market. Input range is 90 to 264VAC (130 to 370VDC). Outputs are 4, 5, 12, 15 and 24V. They are semi-regulated but remain within +/-5 per cent for mains, load and temperature variations from -25 to 55°C (75°C with derating). Power consumption at no load is less than 100mW.


Average operating life is over 1.6 million hours (K series) and over 2.2 million hours (KT series) at 25°C.

*www.rutronik24.com*

# N
## ES News

## In Brief

**Tolerance compensation**
A new addition to ODU-MAC Silver-Line modular connectors for docking systems is the P4+ frame, which is designed to overcome tolerance compensation and ensure a durable interface for at least 100,000 mating cycles. Tolerance compensation is 1.0mm (axial) and +/-4mm (radial). No minimum order quantity.
*odu.de*

**Supporting innovation**
Würth Elektronik has joined the circle of organizations supporting the new MakerSpace of Susanne Klatten's non-profit, UnternehmerTUM. The prototype workshop offers start-ups, innovation teams and the DIY community a place to produce ideas and innovations in the form of prototypes and small series. Würth contributes with expert talks, design support and a tech library.
*www.we-online.com*

**Solderless connections**
Rosenberger has introduced Multiport Mini-SMP cable assemblies and PCB connectors which can be mounted solderless on printed circuit boards. The connectors can be connected with RPC-2.92 cable assemblies for frequencies DC to 40GHz or RPC-1.85 cable assemblies for frequencies up to 65GHz. The system is available with 8 or 16 channels.
*www.rosenberger.com*

**Disproportionate growth**
In the fourth quarter of 2021, the German components distribution sector again achieved disproportionate growth. Driven by the ongoing shortage of components, sales rose by 48.6 per cent to 939 million euros. A 103 per cent rise to €1.55 billion from October to December 2021 brings the total order book for 2021 to a staggering €5.7 billion.
*www.fbdi.de*

## Investing in IC expansion

ASIC specialist ICsense has opened an office in Ghent to help meet IC demand from sectors including car manufacturers and medical equipment suppliers.

ICsense CEO, Bram De Muer, said: "With this expansion we demonstrate both our leadership and ambition. And with the new office, we also gain access to the expertise and talent pool of the Ghent region. A region which alongside Leuven is an important education and knowledge cluster for new technologies. Newly graduated engineers and experienced designers can come and work with us on projects with real impact, and at the same time bolster their careers."

*www.icsense.com*

## More connector choice

Conrad Electronic is now distributing Molex connectors, with its sourcing platform stocking over 4,000 Molex products, including USB-C and Molex Easy-On FFC/FPC connectors.

USB-C plugs and sockets have a 5A current rating and support data transfer rates of up to 40Gbps. These connectors are available in vertical, top and mid-mounting style, offering a variety of soldering and arrangement options, plus sealed versions using high-temperature plastic and Nylon insert moulding to provide the required robustness.

Molex's super-fine pitch and mini FFC/FPC connectors come as ZIF, non-ZIF, slider and flip actuator types. They also comprise a range of FPC-to-board designs.

Conrad Electronic's Senior director and leader of the product and supplier strategy team, Michael Schlagenhauferr, said: "Adding Molex product lines is the perfect way to further expand our wide and deep range catering for businesses in the electronics, manufacturing, automation and IT sector."

Molex director of distribution Europe, Paul Keenan, added: "Molex is excited to embark on this new relationship. Conrad's significant presence in Central Europe enables us to support a wealth of customers through their digital sourcing platform, and we expect this move will further strengthen Molex's position in the electronics market in this region."

*conrad.com*


## Relays: everything you need to know

Panasonic Industry has launched its PhotoMOS mobile app to help users explore its range of over 400 types of photo-coupled Mosfet relays. Photo-coupled Mosfet relays offer a proven and modern alternative to their electromechanical predecessors.

The app is designed to make finding the most suitable relays among the 400 variants quick and easy. Users can save their results as favourites, directly download the datasheet or immediately request samples.

For anyone curious to learn more about the technology, the integrated MOSpedia offers answers on specs, features and benefits of PhotoMOS relays. Over a dozen application notes provide answers to common questions.

Panasonic Industry's Sebastian Holzinger said: "Nowadays, being a committed enabler for the industry does not only mean developing market-leading and reliable technologies, but also making them accessible and sharing relevant knowledge in the easiest way possible. Where would that work out quicker and easier than on the mobile devices we have with us every day?"

*www.panasonic.com*

- **No MOQ requirements**
- **Knowledgeable customer service**
- **Value-added options such as lengths, colours, packaging & labeling**
- **Blanket and scheduled orders available**

# Interpower® North American & International Power Cords MADE IN AMERICA

Interpower North American and international cords and cord sets provide the correct amperages and voltages to end users when connecting to country-specific mains power—our cords are ready to use right out of the box. Use them separately, or integrate custom-length cords and devices using an Interpower power distribution unit or an accessory power strip.


Interpower manufactures dependable, standards-ready cords and cord sets. Every Interpower cord and component is subjected to Interpower's strict quality control procedures: hipot testing, continuity testing, ground testing, and multiple inspections after each process to guarantee electrical continuity.

Interpower provides expert customer service Monday through Friday from 8.00 to 16.00 GMT. Our knowledgeable staff will assist you in finding exactly what you need. Please find our Guide to Worldwide Plug and Socket Patterns at www.interpower.com/guide. Order 1 cord or 5,000 cords—made in the U.S.A.!

**Order Online! www.interpower.com**

**UK Business Hours:** 8.00–16.00 GMT

interpower®

**INTERPOWER UK** | 10 Kelvin Drive | Knowlhill | Milton Keynes | Buckinghamshire | MK5 8NH | UK | Freephone: 00800 5566 5566 | Freefax: 0088 5655 5655 | uk@interpower.com

# Success lies in managing components across the board

*TTI's vice president global accounts, Michael Kennedy, offers strategies to help EMS firms find success as global supply chains remain in flux*

Electronics manufacturing service providers faced many challenges in 2021, including component shortages, inflationary pricing, logistics challenges and Covid-19-related restrictions and closures across multiple geographies. With average lead times for many components extending rapidly from a standard 12 to 16-weeks to more than 40-weeks, EMS providers and their end customers have been challenged to stay ahead of the increasing trend and source the components needed to complete end product builds.

While the press has focused on semiconductor shortages, the realities of long lead times and price increases on interconnect, passive, electromechanical and discrete products have also been difficult to manage. Compared to 2018 when primarily MLCCs were affected, today we are hard-pressed to find any component category not hit by labor, capacity or materials issues.

2022 started with extending lead times and constraints regarding connectors, relays, pressure/temperature sensors, tantalum capacitors and high-CV/auto-grade MLCCs. With the focus on the higher-dollar ICs and availability issues, these components may not be top-of-mind. Yet, any of these devices can stop a production line and prevent revenue.

The challenge is managing the full range of components across the board or harness assembly, maintaining a focus on inventory and cash flows, while assuring supply of low-cost, commodity parts.

This is where a distributor partner can help. For instance, TTI has experience working strategically with EMS providers to find more efficient ways of doing business, particularly interconnect, passive, electromechanical and discrete products that normally represent 20 per cent of the spend, but 80 per cent of the part count.

Our most successful EMS partners find value in multiple distributor-provided solutions such as: digital engagement with API or EDI; forecast management with buffer stock; on-site supply chain programs; proximity warehousing; flexibility related to rescheduling/cancellation and lower MOQs; influential component manufacturer relationships; and extensive available-to-sell inventory positions.

Distributors are also closely connected with component manufacturers and thus able to provide market updates and help EMS customers keep lead times up to date—often providing early identification of forthcoming challenges and buffering against supply chain gaps.

Combining supply chain solutions can help EMS customers minimize inventory holding costs and drive better inventory turn models. EMS inventories continued to rise throughout 2021 as product flowed in, only to sit idle because certain critical components had been delayed, preventing builds being completed.This results in potential cash flow challenges, although end customers have been more amenable to fund some portion of these inventories and accept higher pricing to source critical components to better meet build schedules.

Partnering with a distributor offers the advantage of lower total cost of ownership. EMS providers can reduce inventory holding costs, improve flexibility, mitigate a certain degree of increasing prices and leverage distributor relationships and supply chain solutions.

*tti.com*

**TTI's** vice president global accounts, **Michael Kennedy**

**2022 started with extending lead times and constraints regarding connectors, relays, pressure/temperature sensors, tantalum capacitors and high-CV/auto-grade MLCCs**

# Tips for selecting a distribution partner

*Mouser Electronics' customer service director EMEA, Isabel Hanson, offers buyers' five tips when selecting a distribution partner*

**Tip 1: Relationships**
Many buyers are non-technical so it's important for distributors to provide the tools and guidance they need to become confident when purchasing complex components. Mouser helps make customers—regardless of their technical expertise—comfortable in their buying journey via purchasing tools and human initiatives. For example, Mouser's bill-of-materials tool helps buyers make sense of incomplete product codes and/or part numbers. It provides buyers with obsolescence status and last-time-buy management by providing information about products manufacturers are planning to retire and then helping them identify suitable and timely replacements.

**Tip 2: Trust**
Buyers must trust their distributor, who in turn must establish a basis for and build on that trust. Mouser has a long, proven track record as a supplier to hundreds of thousands of customers. The company provides in-person support for customers who don't wish to use self-service features. Mouser only sells traceable, genuine and authentic components that meet strict quality control standards, with accreditation to standards such as AS6496, AS9100D, ISO 9001:2015 and ANSI/ESD S20.20-2014.

**Tip 3: Digital advancements**
Mouser considers digital processes and digital tools as key enablers that make buying as seamless as possible. The company has designed its EDI and API platforms so they can be easily integrated with a buyer's ERP or ordering system, helping them reduce the paperwork and processing time associated with placing orders. Mouser's buyer's guide is structured to allow the selection of visually identifiable products and not just alphanumeric part codes, which can be confused. Customers can also tailor the search filter to meet their bespoke requirements. For example, by using a Punch Out/OCI, buyers can search by specific suppliers.

**Tip 4: Quality and data integrity**
Buyers understand the importance of accuracy when the difference of a single letter can mean a completely different product. That's why it's important for a distributor to provide information with unquestionable integrity. Mouser assures buyers that it always uses accurate and reliable part numbers and product codes. To help eliminate any doubts, Mouser also provides the option to search products using part images. Information includes a full portfolio of datasheets, 3D CAD models, part footprints and other product data.

**Tip 5: Communication**
If the buyer/distributor relationship breaks down, it can usually be traced to a lack of communication. Mouser understands the need to keep channels of communication permanently open. Buyers are sent immediate updates when products come back into stock and requests for quotation are responded to promptly. The company provides real-time information on order handling to keep buyers aware of the progress of shipments. Mouser also offers basket-sharing that lets buyers collaborate with colleagues that wish to provide input to their ordering process. In addition to these direct communication options, Mouser sends timely, relevant and accurate newsletters about new products, offering buyers the chance to keep up-to-date without having to contact the company directly.

*eu.mouser.com*

**Mouser Electronics'** customer service director EMEA, **Isabel Hanson**

**Buyers understand the importance of accuracy when the difference of a single letter can mean a completely different product**

SPONSORED BY EBV Elektronik | An Avnet Company |

# Sensing our analogue world

*EBV Elektronik's director segment analogue/power, Milan Ivković, walks readers through analogue to digital conversion with a focus on temperature sensing*

**MILAN IVKOVIĆ - DIRECTOR SEGMENT ANALOGUE/POWER AT EBV ELEKTRONIK**

Our world relies on a constant stream of digital data, but our world is not digital. Everything around us is measured in analogue values: we merely convert them to digital representations for the convenience of data processing. Measurements of temperature and air pressure, and circuit parameters such as voltage and radio frequency, are all analogue.

Modern industrial automation systems are responsible for increasing the operational effectiveness of factories and manufacturing plants using data gathered from a variety of sensors.

## Converting analogue signals to digital values

The processing, manipulation and interpretation of the measured data occur in the digital domain using devices such as microcontrollers. These devices can perform hundreds of complex calculations per second, allowing other control system parts to decide if an action is required. Getting the analogue data into the digital system takes place inside an analogue to digital converter (ADC) IC: Fig 1.

In simple terms, an ADC measures the analogue signal at a uniform rate and assigns a digital value to each sample. Each digital value represents a small range of analogue values, resulting in the digital output of a smooth sine wave becoming a series of digital steps or levels. An 8-bit ADC can resolve an analogue signal into a maximum of 256 levels. In contrast, a 16-bit ADC provides 65,536 levels.

Sensor ICs or modules typically incorporate an ADC and a digital interface. The measurement, conversion, and connectivity functions become integrated into a single compact package with this approach, saving valuable PCB space.

Fig 2 illustrates a typical integrated temperature sensor IC with an integrated serial digital I2C interface. The sensor can measure temperatures from -55 to 125°C and the integrated ADC is configurable from nine to 12-bits.

## Process technologies for analogue applications

Semiconductors are lithographically produced at a specific geometry. The smaller the geometry, the higher the transistor density, allowing the fabrication of sophisticated devices. Today, popular geometries are 10 and 7nm. Many analogue ICs do not require advanced process nodes, so legacy geometries such as 55 and 65nm are still viable. Other process technologies reduce the IC's active and standby power consumption and leakage current characteristics, vital for any battery-powered device.

## Simulating analogue

Unlike many digital-based circuits, designing an analogue function typically requires more design effort. For example, using opamps to create a sensor's active bandpass filter. The opamp datasheet might give the formula to calculate the passive components needed to achieve the desired filter bandwidth but takes considerable time.

Analogue simulation tools such as Microchip's MPLAB Mindi and Infineon's Designer significantly simplify and speed the circuit design process.

## Measuring our analogue world

Today's digital processing technologies deliver impressive computing capabilities but to measure and control the world around us, we rely on analogue ICs and sensors.

*www.ebv.com*

**FIG 1 - ANALOGUE TO DIGITAL CONVERSION**


**FIG 2 - EXAMPLE ANALOGUE TEMPERATURE SENSOR IC**

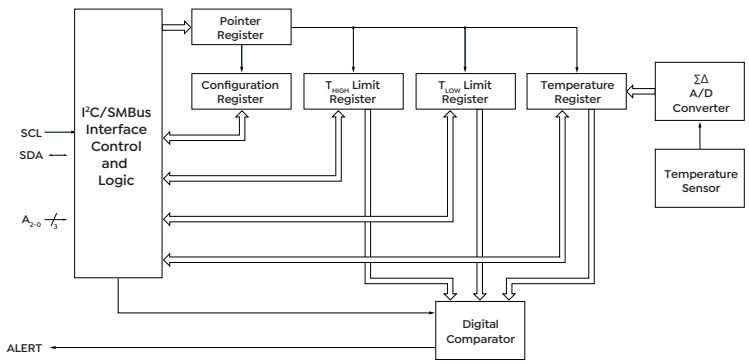

# Foundations for sustainable growth

*In this article, Electronics Sourcing quizzes Smith's chief globalization officer, Mark Bollinger, about the supply chain, environmental commitments and more*

**Q: With ongoing chip shortages, plus other bumps in the road with Covid, truck driver shortages and staff isolating, how has Smith adapted to ensure component availability and delivery?**

**A:** Smith has an in-house global logistics team that is fully prepared to help customers get the parts they need, when they need them. Our strategic hubs in Houston, Hong Kong and Amsterdam are our bases of operations for the extensive, customer-specific logistics and inventory-management programs that help power our customers' success. Supported by longstanding relationships with all major logistics carriers and flexible solutions made to fit unique needs, Smith can safely and efficiently deliver electronic components to customers.

The health and safety of employees and partners around the globe is one of the most important factors we consider throughout our day-to-day business operations. By implementing requirements for periodic testing for onsite employees, staggering certain shifts to reduce crowding and utilizing recommended sanitization practices, Smith has been able to help reduce the risk of Covid-19 exposure and keep employees safe. Where possible, we also offer employees flexibility around WFH, which helps further prevent unnecessary exposure.

**Q: Electronic Sourcing's latest reader research shows purchasing professionals' increasing interest in environmental packaging. What is Smith's stance?**

**A:** Smith is committed to protecting the environment through our procedures and practices, and we have adopted an environmental policy to identify packaging materials that meet international environmental standards. But, like everything at Smith, we aren't content to just meet expectations. We strive to exceed industry and regulatory requirements when it comes to our commitment to sustainability.

With billions of products shipped worldwide each year, packaging is a significant opportunity for us to positively impact the environment. Our commitment to using only 100 per cent recycled materials in our packaging gives those materials new life and helps reduce waste in landfills while still maintaining high standards for ESD compliance and safety.

Smith is also globally certified to ISO14001:2015, which provides a framework for our environmental management systems and recognizes our commitment to following industry best practices for sustainability. Smith's Houston and Amsterdam operational hubs are R2-certified, which establishes guidelines for responsibly managing retired electronic equipment, components and materials.

**Q: Which manufacturing sectors are performing well at present and has Smith identified new sectors that will drive future manufacturing growth?**

**A:** Like the widespread growth of the semiconductor market as a whole, Smith is experiencing significant growth across all customer industries. Most significantly, automotive customers are still not able to procure enough supply of semiconductors to meet growing vehicle demand. We expect our client base in the automotive sphere to continue to grow into the new year.

Additionally, the explosive growth of the cloud industry and its matching need for infrastructure has expanded opportunities for companies to procure product on the open market. Smith supports our customers across all industries with our sophisticated market intelligence information to help them make more informed purchasing decisions. We also offer crossmatching of parts where available.

*smithweb.com*

**Smith's** chief globalization officer, **Mark Bollinger**

> **Smith has an in-house global logistics team that is fully prepared to help customers get the parts they need, when they need them**

# Take control of your supply chain

*NewPower suggests buyers start protecting their supply chains from an economic downturn that could rival the 2008 financial crisis*

The circumstances of an economic collapse have been building as the economy's outlook remains uncertain. In 2020 overall demand plummeted as the pandemic kept everyone in hibernation. Many businesses had mass-layoffs and others were forced to close.

Federal Governments across the globe invested large amounts of cash into their economies to keep people afloat. This cash also set the stage for unprecedented demand. Cloud-based/stay-at-home services drove a steep incline in demand and the trickle-down effect of people staying home and isolating created a labor shortage.

The pandemic highlighted the imperfections in the global logistics system, leading to wider spread issues. Supply chains were thrown out of sync globally, causing product shortages and price increases for transportation and storage capacity. Companies around the world are dealing with these very issues today.

This situation is leading global economists and supply chain veterans to contemplate the recession-like effects of a bullwhip and what it would do to the world's leading economies.

Historically, recessions are typically triggered by a massive increase in demand, almost exactly like what we're experiencing now.

An increase in demand coupled with companies struggling to manage through it with supply, logistics, pricing, labor, etc., is causing businesses to place huge orders with distributors to ensure supply. As a result, distributors are placing even larger orders with manufacturers to make sure they have inventory to support further forecasted demand. Uncertainty of product availability and delivery times are also at play.

In the end, orders and inventories are overdone at every step in the supply chain, creating an overinflated result. Demand for products will most certainly drop as the pandemic wanes, and when that happens, orders will also drop off tremendously. Companies will desperately try to offload bloated inventories and the impacts on organizations will only worsen moving up the chain. Similar to 2008's financial crisis, the sudden decrease in demand will cause significant company issues and job losses.

However, companies can act now to avoid the impacts of these impending issues. Businesses need to identify their critically important suppliers and monitor them closely, specifically investigating their financial health. They may be frightened by what they learn and realize the need to do more than contemplate financial methods to ensure essential suppliers can survive a recession-like period.

Forward-looking companies have begun thinking about surviving and thriving in such an environment. Throughout the pandemic, these companies have streamlined their supplier base. For other companies to make it through, now is the time to establish supply chain control and transparency.

For example, inventory management solutions, like those offered by NewPower Worldwide, are designed to minimize supply chain issues and related challenges encountered if a recession impacted their supplier base. Controlling inventory and stabilizing the supply of electronic components ensures an organization thrives in an uncertain future.

*www.newpowerww.com*

> **Forward-looking companies have begun thinking about surviving and thriving in such an environment**

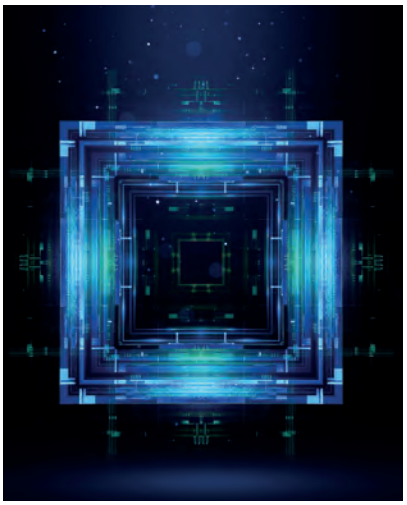

# When damage from high power transients is not an option

Central™ Semiconductor Corp.

discretes do matter™

over 47 years of innovative solutions

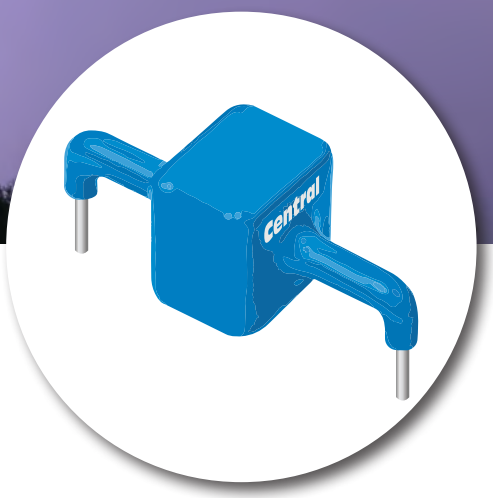


## Protect your designs with high power transient voltage suppressors

CAK3-012C Series: 3kA | 12V-380V
CAK6-042C Series: 6kA | 42V-240V

The CAK3 & CAK6 series transient voltage suppressors (TVS) are bi-directional glass passivated junction devices, designed to protect voltage-sensitive components from high energy transients most directly associated with lightning strikes and inductive load switching. These highly energy efficient devices also feature a tight clamping ratio ($V_C/V_{RWM}$) to ensure fast and precise protection of sensitive electronics, and have no inherent wear-out mechanism, common with metal oxide varistor (MOV) type components.

### Features

- Bi-directional TVS
- Wide voltage range
- ESD protection of data lines in accordance with IEC 61000-4-2
- RoHS and REACH compliant
- Halogen free

### Applications

- High power AC/DC line surge protection
- 5G telecom systems

### Benefits

- Energy efficiency
- Glass passivated chip for optimum reliability
- Very low clamping voltage (as low as 28V)

**Learn more online at:**
www.centralsemi.com/featured-products/34

**Scan QR:**

**Available through distribution:**

Digi-Key ELECTRONICS — www.digikey.com

MOUSER ELECTRONICS — www.mouser.com

diodes & rectifiers | bipolar transistors | MOSFETs & JFETs | protection devices | thyristors | multi discrete modules

**www.centralsemi.com**
**001.631.435.1110**

require a custom solution? Just Ask

Central Semiconductor Corp. • 145 Adams Ave. • Hauppauge NY 11788 • USA

# Obsolescence management the green way

*Rochester Electronics discusses how authorized after-market distributors are helping manufacturers extend equipment service life*

Prevention of waste is the primary goal of environmental legislators. Laws covering reduction of waste, such as the Waste from Electrical and Electronic Equipment (WEEE) Directive (2012/19/EU) and the UK's Right-to-Repair Law introduced in 2021, aim to prevent the creation of WEEE and encourage equipment re-use and repair.

Rochester Electronics' partnership with semiconductor companies supports installed equipment in applications across all market sectors, allowing original designs to continue unchanged. This is achieved by leveraging end-of-life (EOL) and obsolete finished goods inventory, licensed manufacturing and authorised component replication. This model is the ultimate demonstration of waste prevention in practice, providing the market with a risk-free safety net in times of allocation.

In the past, surplus components were scrapped rather than re-entering the market in an uncontrolled manner. Many raw materials were recovered but the sunk costs in the original component (energy and resources), were lost. Also, the recovery process is energy intensive and has a poor carbon-footprint.

Today, many semiconductor manufacturers have eliminated surplus component scrappage by engaging the services of an authorised after-market distributor like Rochester. They receive surplus stock and keep it in an authorised AS6496 'bubble'. They act as a trusted instant source of product when demand starts to outstrip supply, so customers can keep production lines rolling.

The second part of the legislation—extension of equipment in-service lives—demands increased component longevity.

Component discontinuations present customers and service providers with a stark choice: commit to a last-time-buy (LTB) quantity of parts to cover all future needs; and/or re-design and re-qualify the end-product. A LTB will be based on best market forecasts at the time. However, what-if circumstances change or in-service life increases?

Semiconductor manufacturers themselves also struggle to precisely match supply with LTB demand. Surpluses inevitably arise, risking possible scrap and waste.

> **An authorised after-market distributor and licensed manufacturer can provide a risk-free safety net**

An authorised after-market distributor and licensed manufacturer can provide a risk-free safety net to help protect against these uncertainties and reduce waste.

Rochester Electronics receives billions of surplus EOL semiconductors each year offering a ready-to-ship stock as a buffer against the uncertainties of the market and has allowed customers to: avoid production stops; extend service-lives; avoid re-designs and re-qualifications; and resurrect older designs to meet critical market demand.

In many cases, in addition to finished goods, surplus wafer/die, test equipment and tooling are also transferred allowing ongoing authorised production, sometimes 20 to 30-years after the original component EOL.

Rochester Electronics is committed to the preservation of the environment and compliance with all relevant environmental laws and regulations while helping customers combat obsolescence. The company fosters this commitment through environmentally sustainable processes, pollution prevention and a continual improvement focus on its manufacturing and distribution operations.

*www.rocelec.com*

# Why hi-rel markets face increasing obsolescence

*In this article, Flip Electronics' President Bill Bradford explains the forces driving component obsolescence and how to defend against it*

Flip Electronics' President Bill Bradford

Semiconductor demand is driven by high volume commercial applications such as mobile phones, IoT, and consumer electronics. End equipment in these markets is constantly upgraded to compete with similar products from other manufacturers which, in turn, fuels demand for higher performance semiconductors. Moore's Law accommodates this demand, chasing ever-smaller circuits that deliver on speed and power. Thus, most new chip capacity coming online supports new technologies.

Legacy semiconductor components are built on more mature (>28nm lithography) processes. Recently this meant relatively low production costs because the wafers are generally considerably less expensive and they are built on fully depreciated manufacturing lines. However, in the wake of the current semiconductor shortage, legacy component supply cannot meet demand and manufacturers are not investing enough in these mature technologies to improve availability.

Doing so would disrupt their cost models, as they would no longer be

building on depreciated equipment. That's if they can still buy replacement fab equipment for mature nodes.

Most applications use some legacy components for simple functions and interfaces, but a much larger percentage of a high-reliability BoM is made up of mature devices. Whether aerospace, defense, telecom, networking infrastructure, or industrial controls, equipment is complex, new designs are costly/time-consuming to produce, and testing/qualification can add significantly to the expense and time. These factors make it prohibitive for high-reliability systems to go through the cadence of regular upgrades to ensure components remain state-of-the-art. In fact, many defense systems are expected to support a lifecycle of multiple decades.

Over time, manufacturers discontinue many legacy components because they have been replaced by a newer, more advanced, higher performance version, or because the equipment required to build the legacy components is no longer viable.

Semiconductor manufacturer consolidation has also reduced the number of legacy component sources, and the rate of product discontinuance notices (PDNs) is increasing. This trend, plus the long design/qualification time for high-reliability systems, means many components are obsolete before a system reaches production, and often most components are obsolete during the planned equipment lifecycle.

This obsolescence, referred to as diminishing manufacturing sources and material shortages (DMSMS), requires a sophisticated forecasting rigor to manage. Precursors to product discontinuance, such as manufacturer announcements, channel inventory trends, supplier consolidation, etc., should be observed. Data modeling can also be used to predict component obsolescence over a longer-term horizon.

Manufacturers of high-reliability equipment can leverage specialty distribution partners to secure availability of obsolete components. Such distributors study the market, perform analytical models, and invest in discontinued inventory when the product is still available to support the lengthy production runs of the manufacturer. In some cases, they can arrange to have additional inventory built to support post last-time-buy requirements.

With semiconductor shortages expected to persist through 2022, high-reliability equipment producers should leverage their distribution partners to assist in predicting and managing the added stress of component obsolescence.

*www.flipelectronics.com*

**Semiconductor demand is driven by high volume commercial applications such as mobile phones, IoT, and consumer electronics**

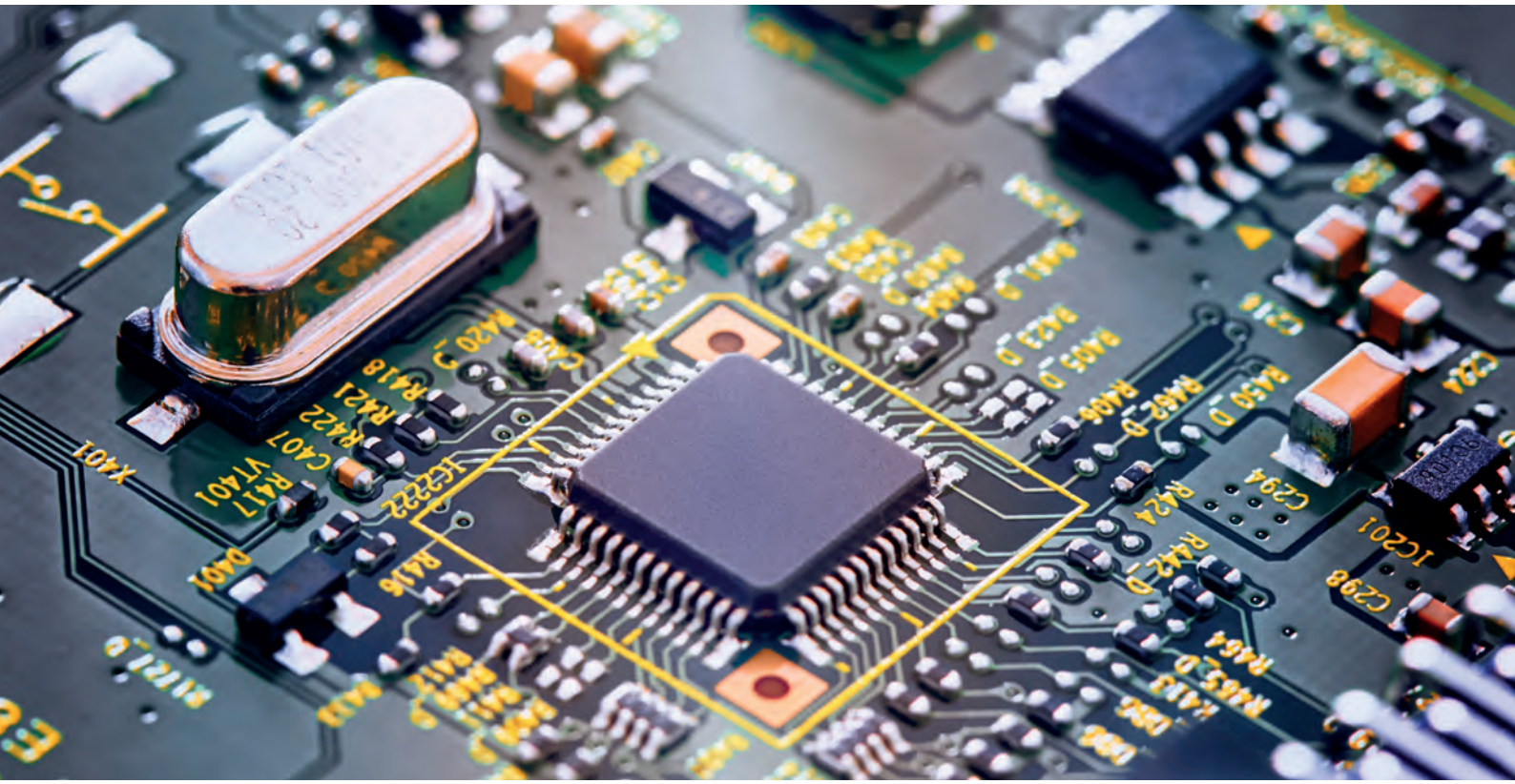

Exclusively sponsored by

# Leveraging digital solutions for strategic procurement

**Margaret Cunha is senior director, supply chain solutions, for Digi-Key Electronics. Digi-Key is both the leader and continuous innovator in the high service distribution of electronic components and automation products worldwide, providing more than 10.7 million components from over 2,200 quality name-brand manufacturers.**

These days, procurement professionals have a more difficult job than ever. Products and materials across all industries are often difficult to obtain, subject to supply chain delays and challenges. The ability to match purchasing needs with available supply may fluctuate by the minute. With so many issues at hand, it can be difficult to think strategically beyond the tactical needs of today.

Strategic procurement is critical to the sustained success of an organization. It goes beyond the day-to-day tasks and looks several years ahead to help determine what is needed to help your organization be successful.

To be sure, tactical, daily procurement tasks like filling purchase orders must still be completed to keep business moving, but finding time to be strategic and plan for the future is just as important to ensure you are poised for success down the road.

## Digital Transformation

Over the past several years, purchasing has become increasingly more digital and increasingly more automated. Digital solutions like Digi-Key's APIs, EDI, and Punchout Catalog bring data in faster, helping purchasers make better supply chain and procurement decisions.

Some purchasers may be intimidated by the idea of automation, but what it ultimately comes down to is bringing in a digital machine-to-machine connection and letting computers do what they do best – make simple, tactical decisions – thus freeing up valuable time for humans to take on more critical and creative thinking, connecting with business partners and ideation.

## Getting Started

Strategic procurement can help you start developing the building blocks today that you'll need to reach your goals in the future. Some questions to consider when it comes to strategic procurement include:

- What does the market look like 1-2 years out?
- What does your purchasing department look like 5-10 years from now?
- Which suppliers do you want to align with?
- What tools do you need to be the best at what you do?

From there, you can begin reviewing which digital solutions might be best to implement for your business. Here's how to get started with Digi-Key's digital solutions:

- Identify the processes you want to improve and automate.
- Consider your current technology infrastructure and resources.
- Evaluate the return on investment with tools such as the API Solutions Calculator.
- Get in touch with any questions.

## Digi-Key Solutions

The supply chain is brimming with data, and strategic, digital procurement processes can leverage that data to optimize outcomes. Digi-Key offers a variety of digital solutions designed to reduce costs and errors and increase efficiency, accuracy, and time to market. If your business could benefit from APIs, EDI, or Punchout Catalog, Digi-Key is ready to help take your eProcurement requirements to the next level.

Learn more at **www.digikey.com/digitalsolutions**

**Digi-Key offers a variety of digital solutions designed to reduce costs and errors and increase efficiency, accuracy, and time to market.**

## PCB sockets available in longer lengths

Harwin has expanded its portfolio of board sockets with additional sizes for its Sycamore Contact range. These 6A current rated surface-mount PCB sockets are ideal in applications such as electric vehicle battery management systems, solid state lighting panels, gas detection systems, fire alarms and smart metering equipment.

Two additions complement the existing 3.87mm length sockets, which accept 0.8 to 1.3mm or 1.5 to 1.9mm mating pins. The new versions have a body length of 5.87mm for use with longer mating pins or in deeper PCBs. Though both versions are bottom entry, they can be inverted to serve as top entry sockets.

Unlike other surface mount sockets, products in the range have three points of contact, thereby maintaining electric connection even when subject to vibration. Sockets also feature gold plating to maximise conductivity and reduce mechanical wear, ensuring long-term operation with a 500-mating cycle durability. A working temperature range of -50 to 125°C is supported due to the use of beryllium copper.

*www.harwin.com*


## Lead-free high current portfolio expanded

Würth Elektronik ICS has added a new bushing variant with a 6mm diameter to its LF PowerBasket surface-mount series of lead-free Powerelements products.

The LF PowerBasket SMD power supply terminals are multi-pluggable and are ideal for use in wire-to-board and board-to-board connections. Compared to conventional systems, the contact blade design is said to reduce insertion and extraction forces. A position tolerance of up to 0.6mm ensures several contacts can be plugged in at the same time. This offers a considerable advantage for three-phase connections.

Powerelements products feature a high current carrying capacity of up to 160A at 20°C. Operating temperature range can be up to 150°C and even up to 170°C for short periods.

LF PowerBasket SMD high current contacts are also manufactured without any lead additive using a punching and bending process. This ensures they are unaffected by impending changes to exemption 6c of the RoHS Directive.

*www.we-online.com/ics*

## SPE solutions facilitate IIoT

Yamaichi Electronics offers a new series of connectors for industrial single pair Ethernet (SPE) according to IEC 63171. The new Y-SPE series includes both IP20 and M12 sockets with IP67 protection for PCB mounting in accordance with IEC standards 63171-2 and -6.

Designed to offer efficient data transmission from the sensor to the cloud, these single pair Ethernet products meet the increasing communication requirements of machines and devices in the production environment. They are particularly suitable for systems with cable distances over 100m.

Due to its large range and uniform communication level, single pair Ethernet is key in the transition to IIoT and Industry 4.0. Transmission takes place via only two contacts, making it possible to build smaller connectors than the previous RJ45. Only one pair of cables is needed, which also saves space, raw materials, weight, and money.

To ensure the supply of power, SPE offers Power over Data Line (PoDL) with a limit of approximately 60W. Alternatively, for components that require more energy, Yamaichi can provide hybrid connectors and customer-specific designs.

*www.yamaichi.de*


## Small connectors deliver automotive quality

Hirose Electric has developed a 1mm pitch wire-to-board connector that can be used safely for automotive applications due to its heat resistance and robust design.

The new GT50 series meets increased demand for wire-to-board connectors caused by the shift to electronic vehicles. These applications require smaller, lighter connectors due to limited mounting space. Heat resistance and the ability to withstand vibration are also essential.

GT50 connectors offer a small size, featuring a 1mm pitch and 5.97mm height. Lances on both the contacts and housing support high retention force during cable pulling. In addition, GT50 boasts sufficient locking strength and PCB peel strength for robust connections.

Heat resistant material and crimp contact design ensure heat resistance of 125°C. A stabilizer also ensures high vibration resistance.

*www.hirose.com/eu*

## Sealed harness solutions in stock

Powell Electronics is now stocking ModICE modular connector enclosures with SHS harness connectors from Cinch Connectivity Solutions. Available from stock for immediate delivery, the range provides sealed packaging solutions for rugged electronic control modules.

The Cinch 1.5mm SHS system is used as the base interconnect technology for ModICE connector enclosures. These sealed rugged I/O connectors are designed to function in extreme environmental conditions commonly found in commercial and off-road vehicles and industrial equipment.

Cinch ModICE connector enclosures are available in three sizes and with four header configurations: 18, 30, 48 and 60 I/O. Resistant to most industrial fluids, the products are sealed to IP67 and IP69K and remain sealed even when the harness connectors are not mated. Further details include a current capacity of 10A at 85°C, a contact resistance of less than 10mOhm, an insulation resistance of over 1,000MOhm, and an operating temperature range of -40 to 125°C. ME headers with integrated RF ports, headers with integrated ferrite filtering, as well as blank headers are also available.

*www.powell-electronics.eu*

# Day in the life of a value-added connector order

*ECCO Connectors offers readers a behind-the-scenes tour of a circular connector's birth including demand, order, build, shipping and delivery in just a few days*

Circular connectors are a unique commodity, often required last minute with delivery ASAP. The following story focusses on a 5015 series mil spec style connector.

The process starts with the end customer AGS, an aircraft test and measure OEM which supports aircraft maintenance operations and often lacks visibility regarding their customer's demand for tools and equipment. Given recent and continuing increases in freight and commercial air travel, AGS needs to replenish its products in the field at much faster rates. It looks online to find material available at authorized distributors and identifies two sources for the exact SKU it needs.

After choosing its desired source, the company places an order for the required quantity of an MS3102E22-19P. The order is transmitted to the distributor via email and confirmed. With a quick turn requested, the distributor's system breaks out the top-level assembly into its various sub-components where a pick ticket and production order are generated. The required material is then picked and delivered to the operator's workstation where it is cleaned and inspected. If all components pass first level inspection the operator follows the work instructions.

The assembly process begins with applying adhesive to the contacts, outer shells and insulators/inserts, which are allowed to air dry. Several sub-tasks follow, including insulator insertion into the outer shell (pneumatic press) and insertion of contacts into the insulator (arbor press). These insert/shell subassemblies are then oven cured for a specific duration, at a calibrated temperature.

Once cured, the parts are moved to QC for inspection

Shipping packaging area

**The assembly process begins with applying adhesive to the contacts, outer shells and insulators/inserts**

and pressure tested to ensure/confirm resilience to fluid penetration. After passing inspection and testing requirements, they are moved to marking to add the finished part number, date code, manufacturer and mint mark to each part produced. The parts are oven cured again to ensure marking permanence.

These subassemblies are then combined with the remaining components to produce the 'top level assembly'. The finished connectors are sent to secondary QC where a separate operator inspects the finished parts regarding assembly and marking. Once completed and stamped with final QC inspection, the parts head to packaging, along with the certificate of compliance and associated shipping documents.

Finally, the connectors are boxed and shipped to AGS Next Day Air given the customer's immediate need. An invoice is generated on shipment and its corresponding tracking number is automatically sent via email to the buyer. This entire process, from start to finish, has taken less than two-days.

Because of their high reliability, circular connectors are used in aerospace, transportation, medical and harsh industrial applications. They come in different sizes and pin configurations that make it difficult to stock all possible variations: thus, the need and benefit for partnering with qualified, authorized, value added connector specialists who can stock the various components, take an order and quickly assemble them into a specific finished good.

ECCO's warehouse acts like a big puzzle box with thousands of puzzle pieces to be put together at a moment's notice to solve customers' quick delivery material demands. In this case AGS got what it needed fast, assembled by a high-quality staff with good jobs right here in the USA.

*www.eccoconnectors.com*

**Because of their high reliability, circular connectors are used in aerospace, transportation, medical and harsh industrial applications**

Part marking

Connector assembly

# Trends influencing the PCB sector

*In this article, NCAB Group's VP sales, Michael Larsson, explores industry trends driving the development of printed circuit boards*

**NCAB Group's** VP sales, **Michael Larsson**

Societal changes are driving electronics innovations, including printed circuit boards. Michael Larsson said: "Although the pandemic has brought many challenges in the last year and a half, the ongoing global trend toward urbanisation has brought greater prosperity for many. There is a rise in middle-income earners, particularly in major Asian nations. More people are living more comfortably and longer and also want better standards and service.

At the same time, efforts are being directed to sustainability to meet the climate challenge and protect the environment. We need to save more energy and implement the shift to fossil-free energy sources. Another aspect of sustainability is working to secure a healthy future for this and future generations.

## Energy industry in transition

Electronics is an important enabler in the development of technologies for smart homes, solar/wind energy, smart grids, electric vehicles and their associated infrastructures. For example, smart homes are seeing rapid development of control and operating systems that optimise well-being, net operating income and energy use. Looking at the climate, we are seeing extensive developments towards more electric transport. This will require new fleets of vehicles and upgraded infrastructures incorporating more electronics.

The energy industry is also undergoing change. Solar and wind have moved from symbolic initiatives into competitive energy sources. This is creating demand for electronics to transfer power surplus locally to the grid for storage or onward to where it is needed. In the manufacturing industry, new control and regulating technology is being developed as a result of advances in sensor technology.

Miniaturisation is another trend driving electronics development. The desire to accommodate more electronics into smaller spaces creates opportunities for new applications. At the same time, it creates challenges regarding thermal management.

Looking specifically at PCBs, Michael noted that miniaturisation is encouraging increasing numbers of NCAB customers to make technological leaps such as using more layers and deploying advanced solutions such as HDI, flex and flex-rigid boards: "Being bold enough to make such a move can result in the customer getting a smarter solution. With today's products, for example, an HDI solution can often help avoid the unnecessary hassle that a traditional design would cause."

## Consolidation in progress

Commercially, the pandemic has challenged everyone in the PCB industry, but smaller players were hit hardest. This drives consolidation among product owners, contract manufacturers and their suppliers. In the future, size will become increasingly important if companies want to be seen as meaningful business partners.

Michael explained: "If you look at the demand for printed circuit boards from a geographic angle, Asia, where the vast majority of boards are manufactured, is the region that is both

> **"An important part of NCAB's strategy is to work closely with product owners, who are seeking more control over PCB sourcing"**


the largest and fastest growing. After that, Europe is the largest market for PCBs. About twice as much volume is imported there compared to the third largest market, North America. So for us at NCAB, this means that we are generally in the right markets. However, we are working to gain even better coverage in markets where we are not so well represented, given that an important part of our business concept is being close to the customers."

> **Going forward, NCAB will continue to focus on growth**

### Reliable PCBs

Today, there are more applications where failure is not an option. Reliability is increasingly crucial. An important part of NCAB's strategy is to work closely with product owners, who are seeking more control over PCB sourcing.

Michael added: "This increased focus on control is often linked to key constructions where their own brand may be at risk. Apart from the quality aspects, this trend is also driven by the product owners' own sustainability ambitions and the legal requirements in this area. Having control over sustainability aspects throughout one's supply chain has quickly become increasingly important for both product owners and EMS companies."

### Growth through knowledge

Going forward, NCAB will continue to focus on growth, both organically and through acquisitions. Capacity is constantly being expanded and NCAB continuously conducts sourcing and factory management work to meet customers' needs regarding, for example, technology and country of manufacture.

Michael concluded: "In addition to control, knowledge is an important part of our offer.Based on the customers' needs, NCAB has over the years built up a knowledge bank that enables us to help customers with good and smart solutions, optimised for production."

*www.ncabgroup.com*

**NCAB** works onsite and directly with factories

# Quest for sustainable electronics

John Denslinger is a former executive VP Murata, president SyChip Wireless, and president/CEO ECIA, the industry's trade association. His career spans 40 years in electronics

*As consumers escalate environmental, social and governance expectations for publicly traded companies, John Denslinger argues there is only one downside: failure to act*

Sustainability • By John Denslinger

ESG, carbon neutral, zero emissions, e-waste, sustainability and similar environmental stewardship labels are more than just talking points in company boardrooms and investment communities. Maybe it was the pandemic that elevated consciousness and the social value of safeguarding the health/safety of employees, workplace, consumer and environment. To be that socially responsible is not a small undertaking. It requires unconditional resource allocation and perhaps a total revamp of business. One only needs to look at the epic investment by our industry in more eco-friendly products, processes, material procurements and end-of-life considerations as evidence that being sustainable matters. It's truly a seismic shift in management priority.

While the pandemic may have opened eyes, it wasn't the only contributor to a social awakening. In 2013, CEA reported the average household made use of 28 electronic products in everyday life. Since then, advances in digitalisation, connectivity, fitness, robotics, drones, VR, AI, EV, and smart home added to that household list: and that just typifies the point. Manufacturers constantly promote and condition consumers to continually buy the latest technology. Unfortunately, what's good for the economy tends to be an undesirable pathway to early obsolescence. A 2018 BCC Research paper identified global electrical/electronic waste at 6.5 per cent CAGR but noted recycling was not keeping pace. EPA's most recent data reports domestic recycling at 30 per cent. Europe is doing better per EEA reports at 40 per cent. Assuming global electronics consumption doubles by 2050 as forecasted, pre-emptive measures are needed now. Introducing more sustainable electronics could be that game changer.

So, what is sustainable electronics? A description search offers a few key words: absent toxic chemicals, reduced carbon footprint, recyclable. Sustainability starts with raw materials, product design, manufacturing techniques, recovery methods and ends with environmental impact considerations. Most companies utilise ISO14000/14001 for structure and planning. This guidance has been available for some time providing the necessary environmental management system with standards to measure and drive improvement.

Launching a sustainability initiative but question where to start? One might do well talking with companies that already:

- Designed and implemented comprehensive programs
- Measured all elements in detail
- Published results against goals
- Showed total transparency throughout

These are the real environmental leaders and each offers valuable insight into sustainable electronics. My former employer, Murata Manufacturing Co has one of the most developed initiatives I've researched, a worthy standard for the industry. Check it out by clicking at the top of their global website: corporate.murata.com/en-global on Corporate Social Responsibility for a complete mapping of ESG initiatives. Remarkable work.

There is plenty of upside to sustainable electronics. The spawning of renewable technologies will be amazing: bio-based materials; biodegradable components; additive manufacturing; recyclable substrates; textile and graphene integrated electronics; cellulose sensors; sustainable batteries; bio-batteries based on printed enzymes; and much more.

If there is one downside, it would be failure to act. Consumers have escalated ESG expectations for publicly traded companies and there is no going back. That pressure is rippling across the industry and down supply chains. Before long, corporate policy will dictate procurement selection based on supplier demonstrated ESG achievement. So, it's not too early to begin the quest for sustainability.

# COTS SSDs v defence-grade

*Avnet Silica's market segment manager, aerospace and defence, Paul Leys, highlights the key differences between COTS SSDs and aerospace and defence-grade products*

Development and production goals of commercially available off-the-shelf (COTS) SSDs are often skewed towards price and performance than criteria such as robustness and reliability. Fig 1 highlights the differences between COTS grade SSDs and those for aerospace and defence (A&D) applications.

Some SSDs use firmware that tracks the amount of data written. Algorithms can detect if excessive writes take place against recorded hours. If excessive use occurs such that the SSD will not meet its warranty specifications, firmware slows down writes to fulfil warranty expectations.

As NAND memory technology has evolved, multi-level and triple-level fabrication methods have increased. SSDs used in aviation and defence applications typically use SLC flash, industrial-grade components and utilise enhanced thermal management to allow high-temperature operation beyond those offered by COTS SSDs.

Ruggedised construction methods used for A&D-grade SSDs helps them survive mechanical shocks and continuous vibration.

Regarding data encryption and elimination, Fig 1 shows COTS SSDs fall short of minimum A&D requirements.

Data encryption must occur within the SSD to internationally recognised aviation and defence standards. Typically, 256-bit AES asymmetric encryption functions encrypt the data during write cycles. Importantly, encryption protects the data and the keys generated also need secure storage.

In defence applications, a threat may necessitate immediate deletion of all data. This applies to the data, keys, firmware and code. A set of different military standards stipulate the degree to which data is purged, cleaned or sanitised, as illustrated in Fig 2.

Engineers selecting an SSD for A&D applications also should review form factor, storage capacity and host interface requirements. Examples of SSDs include those from Mercury Systems, Greenliant and Smart Modular Technologies. Prevalent SSD form factors for space-constrained systems include mSATA (mini-SATA), M.2 and BGA.

*www.avnet-silica.com*

| Design/Requirement | Minimum COTS SSD Design Requirement | Minimum Defence-Grade SSD Design Requirement |
|---|---|---|
| Cost | ● | ◑ |
| Performance (ideal usage scenario) | ● | ◕ |
| Performance (worst case usage scenario) | ◑ or ◕ | ● |
| Media Endurance/Lifespan | ◑ | ● |
| Overall Reliability | ◑ | ● |
| Environmental robustness | ◔ | ● |
| Physical ruggedization | ◔ | ● |
| Security: | | |
| • Production supply chain | ◔ | ● |
| • Secure delivery options | ◔ | ● |
| • Resilience against attack | ◔ | ● |
| • Data at rest protection | ◑ | ● |
| • Data protection with power off | ◑ | ● |
| • Data protection with power on | ◔ | ◑ |
| Long term availability (EOL) | ◔ | ● |
| Customizability/Flexibility | ◔ | ● |

Requirement importance: ◔ = Insignificant, ◑ = Minor, ◕ = Moderate, ● = Severe

Comparison of the design/development goals of COTS SSDs v those for aviation and defence applications (*source: Mercury Systems*)

| Procedure | Standard | Action |
|---|---|---|
| Clear | | All data on the media is erased |
| Sanitize/ Purge | DoD (U.S. Department of Defense, National Security Program Operating Manual): DoD NISPOM 5220.22-M, January 1995 | Erase the media and overwrite with single character, then erase again |
| Sanitize/ Purge | DoD (U.S. Department of Defense, National Security Program Operating Manual): DoD NISPOM 5220.22-M-Sup 1, February 1995 | Erase the media and overwrite with single character, then erase again and overwrite with single character, then erase again and overwrite with random character, then erase again |
| Sanitize/ Purge | NSA (U.S. National Security Agency): NSA/CSS Manual 130-2, 10 November 2000 | Erase the media and overwrite with random data 2 times, then erase and overwrite with a character |
| Sanitize/ Purge | NSA (U.S. National Security Agency): NSA/CSS Manual 9-12, December 2007 | Erase the media and overwrite with known pattern |
| Sanitize/ Purge | U.S. Air Force: AFSSI-5220, 20 August 1996 | Erase the media and overwrite with pattern, repeat 3 times |
| Sanitize/ Purge | U.S. Air Force: AFSSI-5020, 17 April 2003 | Perform 6 passes of the following steps: erase the media and overwrite it with single character, erase the media, and overwrite it with the complement of the previous character, erase the media and overwrite it with a single character |
| Sanitize/ Purge | U.S Army: AR 380-19 15, 27 February 1998 | Erase the media na doverwrite with random data, erase and overwrite with a character, then erase and overwrite with complement of the character |
| Sanitize/ Purge | U.S. Navy: NAVSO P-5239-26, September 1993 | Erase the media and overwrite with random data, then erase again |
| Sanitize/ Purge | RCC-TG (Range Commanders Council Telemetry Group): IRIG 106-15, July 2015 | Erase the media, overwrite with 0x55, erase, overwrite with 0xAA, and then erase again. Then fill the drive with a repeating string of Secure Erase |
| Fast Clear | | All data on the media is erased simultaneously |

Standards for data elimination (*source: SMART High Reliability Solutions*)

# MANUFACTURERS ARE BECOMING RESOURCEFUL AND PLANNING FOR THE LONG-TERM TO COUNTER INDUSTRY-WIDE SHORTAGES

Aligning supply with surging demand in various sectors is an ongoing challenge for many manufacturers due to persistent supply chain issues. From ongoing COVID-19 outbreaks to extreme weather, workforce shortages and geopolitical conflicts, supply chain disruptions keep mounting.

The consequence: surging prices across various commodities and lead times that extend from months to years. The result: manufacturers becoming more resourceful in their supply chain strategies.

## Adjusting as the World Seems to be Running Out of Everything

The raw material shortages that have been haunting the electronic component manufacturing supply chain show little signs of subsiding. DigiTimes reports "the supply of ABF substrates will continue to be at least 20% short of demand in 2022." Worse, new capacities are unlikely to alleviate the strain until 2023. The shortage of ABF substrate is a concern that manufacturers like Intel, Nvidia and Advanced Micro Devices Inc. (AMD) have voiced as a primary setback to their GPU, CPU and IC component production. As the competitors battle for allocation, a 20% price increase is anticipated. To alleviate some of the stress on its production, Intel is diversifying its ABF substrate sources from various suppliers in Vietnam, Japan, Taiwan and southwestern China.

Similarly, silicon price and availability are impacting silicon wafer production, which has been tight since Q3 2019. Siltronic AG, Shin-Etsu Chemical Co. Ltd and SUMCO Corporation are among the top silicon wafer manufacturers that supply wafers to chipmakers. With their output limited due to silicon shortages, the trickledown effect is exacerbating current silicon wafer bottlenecks. For example, lead time of Diodes Incorporated parts is up to 80 plus weeks as the limited wafer availability stifles capacity.

As a result of industry-wide difficulties to allocate raw material supply for component builds, prices are expected to increase in the coming months.

## Planning to Face Workforce Shortages Head-On

In 2021, many manufacturers turned to long-term planning, leading to factory expansion as a solution to align supply with demand. This included Intel Corporation, Samsung Electronics, Micron Technologies and others investing billions of dollars to build new chipmaking facilities. However, once the factories are built, the concern is a growing scarcity of talent to fill them. As a result, some governments and regional manufacturers are investing in feeder institutions.

For example, the local Taiwanese government and chipmakers like TSMC are investing up to $300 million in connected universities; the US passed a bill providing billions of dollars to scholarships, workforce programs and technology institutions to invest in the future semiconductor workforce; and the EU is moving to implement a Chips Act in the interest of growing its stake in semiconductor manufacturing. These investments will take time to make an impact, which means manufacturers will have to adapt to the current workforce shortages that have been plaguing production lines since 2021.

## Bracing for the Long-term

Although manufacturers are re-assessing supply chain strategies to build more resilient processes, the results will take time to manifest. This means operational setbacks will likely be felt from manufacturers to consumers throughout 2022 until a balance between supply and demand can be reached.

# Don't let supply chain issues dampen charging innovation

*Knowles Precision Devices' key account manager automotive, Brandon S Peeler, explains why high voltage knowledge and flexible in-house manufacturing underpin EV innovation*

While electric vehicles are rapidly gaining in popularity, many consumers are still concerned with charging times and range. To ease these fears, EV manufacturers need technologies that increase efficiency of on-board/external power conversion and management devices for charging and battery systems. Components are required that efficiently handle high voltages, such as capacitors that reduce losses in the AC/DC or DC/DC converter, or filters that eliminate noise on the AC line.

However, consumer demand for charging innovation and the practicalities of sourcing components during the current pandemic-induced materials shortage are at odds, presenting challenges for purchasing managers. Thus, it is critical to select a supplier that understands the high voltage EV space and can sidestep traditional manufacturing processes and materials that may require long lead times.

A supplier should provide a variety of AEC-Q200-qualified multilayer ceramic capacitors (MLCCs) designed for EVs. Knowles Precision Devices provides high-capacitance, small-size MLCCs rated to 5kV—the highest in the industry. These MLCCs offer EV friendly options. For example, MLCCs built with Hiteca dielectric deliver high-capacitance stability over high temperature and voltage, plus lower parasitic losses under common operating conditions. Safety-certified capacitors are also offered that comply with UL and TÜV specifications. Options include FlexiCap to reduce risk of mechanical cracking.

Consider a supplier's experience providing components for high-power electronic systems because many traditional automotive suppliers are accustomed to working with 12 or 24V applications, while EV components need to handle up to 800V. A supplier with EV experience can also add value during the design process, helping avoid costly mistakes such as overheating, flashovers and current creepage.

Suppliers that traditionally provide commercial off-the-shelf components for combustion vehicles or consumer electronics are feeling the effects of supply chain disruptions the hardest. Knowles Precision Devices' unique in-house manufacturing techniques have helped the company avoid many of these issues, making it possible to continue offering some of thefastest lead times at around 10-weeks.

The machinery and processes are also flexible so the company can quickly adjust to changes and produce multiple case sizes with a variety of capacitance levels.

As EV designs evolve the specifications are changing almost quarterly. This can pose an issue for most suppliers, even in a stable market. However, Knowles Precision Devices has built its business on solving new and quickly changing design challenges, an approach that has helped the company become a market leader in supplying MLCCs to many of the major EV suppliers and charging station manufacturers around the world.

*www.knowlescapacitors.com*

**Knowles Precision Devices'** automotive key account manager, **Brandon Peeler**

**While electric vehicles are rapidly gaining in popularity, many consumers are still concerned with charging times and range**

| Manufacturer | Distributor | Telephone | Website | Location | Franchised Distributor | No. of Lines for Principle | Stock Value for Principle | Minimum Order Value | % Lead Free for Principle Range | No. of Technical Support Staff | Total No. of Staff | Buffer Stock Facility |
|---|---|---|---|---|---|---|---|---|---|---|---|---|
| **CABLE ASSEMBLY & HARNESSING** | | | | | | | | | | | | |
| Amphenol | Mouser Electronics | 0049 (0)89 520 462 110 | www.mouser.com | EU | Y | 3,000 | N/A | 0 € | N/A | 50 | 2,500+ | Y |
| FTDI | Mouser Electronics | 0049 (0)89 520 462 110 | www.mouser.com | EU | Y | 50 | N/A | 0 € | N/A | 50 | 2,500+ | Y |
| Harwin | Mouser Electronics | 0049 (0)89 520 462 110 | www.mouser.com | EU | Y | 600 | N/A | 0 € | N/A | 50 | 2,500+ | Y |
| Molex | Mouser Electronics | 0049 (0)89 520 462 110 | www.mouser.com | EU | Y | 2,550 | N/A | 0 € | N/A | 50 | 2,500+ | Y |
| Phoenix Contact | Mouser Electronics | 0049 (0)89 520 462 110 | www.mouser.com | EU | Y | 2,200 | N/A | 0 € | N/A | 50 | 2,500+ | Y |
| **CIRCUIT PROTECTION** | | | | | | | | | | | | |
| Bourns | Mouser Electronics | 0049 (0)89 520 462 110 | www.mouser.com | EU | Y | 2,800 | N/A | 0 € | N/A | 50 | 2,500+ | Y |
| EPCOS/TDK | Mouser Electronics | 0049 (0)89 520 462 110 | www.mouser.com | EU | Y | 1,950 | N/A | 0 € | N/A | 50 | 2,500+ | Y |
| Littelfuse | Mouser Electronics | 0049 (0)89 520 462 110 | www.mouser.com | EU | Y | 11,450 | N/A | 0 € | N/A | 50 | 2,500+ | Y |
| Vishay | Mouser Electronics | 0049 (0)89 520 462 110 | www.mouser.com | EU | Y | 3,150 | N/A | 0 € | N/A | 50 | 2,500+ | Y |
| **ENCLOSURES** | | | | | | | | | | | | |
| Bud Industries | Mouser Electronics | 0049 (0)89 520 462 110 | www.mouser.com | EU | Y | 1,600 | N/A | 0 € | N/A | 50 | 2,500+ | Y |
| Hammond | Mouser Electronics | 0049 (0)89 520 462 110 | www.mouser.com | EU | Y | 3,350 | N/A | 0 € | N/A | 50 | 2,500+ | Y |
| Metcase Enclosures | OKW Enclosures | +44 (0) 1489 583858 | www.metcase.com | EU | N/A | 288 | £40K | 0 € | 100% | 5 | 22 | Y |
| New Age Enclosures | Mouser Electronics | 0049 (0)89 520 462 110 | www.mouser.com | EU | Y | 150 | N/A | 0 € | N/A | 50 | 2,500+ | Y |
| **FREQUENCY MANAGEMENT** | | | | | | | | | | | | |
| ABRACON | Mouser Electronics | 0049 (0)89 520 462 110 | www.mouser.com | EU | Y | 2,750 | N/A | 0 € | N/A | 50 | 2,500+ | Y |
| Analog Devices Inc. | Mouser Electronics | 0049 (0)89 520 462 110 | www.mouser.com | EU | Y | 150 | N/A | 0 € | N/A | 50 | 2,500+ | Y |
| ECS | Mouser Electronics | 0049 (0)89 520 462 110 | www.mouser.com | EU | Y | 2,050 | N/A | 0 € | N/A | 50 | 2,500+ | Y |
| Epson | Mouser Electronics | 0049 (0)89 520 462 110 | www.mouser.com | EU | Y | 900 | N/A | 0 € | N/A | 50 | 2,500+ | Y |
| IQD Frequency Products | Mouser Electronics | 0049 (0)89 520 462 110 | www.mouser.com | EU | Y | 1,500 | N/A | 0 € | N/A | 50 | 2,500+ | Y |
| Kyocera | Mouser Electronics | 0049 (0)89 520 462 110 | www.mouser.com | EU | Y | 950 | N/A | 0 € | N/A | 50 | 2,500+ | Y |
| Microchip | Mouser Electronics | 0049 (0)89 520 462 110 | www.mouser.com | EU | Y | 1,450 | N/A | 0 € | N/A | 50 | 2,500+ | Y |
| Murata | Mouser Electronics | 0049 (0)89 520 462 110 | www.mouser.com | EU | Y | 550 | N/A | 0 € | N/A | 50 | 2,500+ | Y |
| Silicon Laboratories | Mouser Electronics | 0049 (0)89 520 462 110 | www.mouser.com | EU | Y | 500 | N/A | 0 € | N/A | 50 | 2,500+ | Y |
| TXC Corporation | Mouser Electronics | 0049 (0)89 520 462 110 | www.mouser.com | EU | Y | 500 | N/A | 0 € | N/A | 50 | 2,500+ | Y |
| **HEATSINKS** | | | | | | | | | | | | |
| Aavid | Mouser Electronics | 0049 (0)89 520 462 110 | www.mouser.com | EU | Y | 200 | N/A | 0 € | N/A | 50 | 2,500+ | Y |
| **ICs & SEMICONDUCTORS** | | | | | | | | | | | | |
| Alliance Memory | Mouser Electronics | 0049 (0)89 520 462 110 | www.mouser.com | EU | Y | 500 | N/A | 0 € | N/A | 50 | 2,500+ | Y |
| Analog Devices Inc. | Mouser Electronics | 0049 (0)89 520 462 110 | www.mouser.com | EU | Y | 18,700 | N/A | 0 € | N/A | 50 | 2,500+ | Y |
| Broadcom Limited | Mouser Electronics | 0049 (0)89 520 462 110 | www.mouser.com | EU | Y | 200 | N/A | 0 € | N/A | 50 | 2,500+ | Y |
| Central Semiconductor | Mouser Electronics | 0049 (0)89 520 462 110 | www.mouser.com | EU | Y | 1,250 | N/A | 0 € | N/A | 50 | 2,500+ | Y |
| Cirrus Logic | Mouser Electronics | 0049 (0)89 520 462 110 | www.mouser.com | EU | Y | 200 | N/A | 0 € | N/A | 50 | 2,500+ | Y |
| Cree, Inc. | Mouser Electronics | 0049 (0)89 520 462 110 | www.mouser.com | EU | Y | 200 | N/A | 0 € | N/A | 50 | 2,500+ | Y |
| Diodes Incorporated | Mouser Electronics | 0049 (0)89 520 462 110 | www.mouser.com | EU | Y | 8,200 | N/A | 0 € | N/A | 50 | 2,500+ | Y |
| FTDI | Mouser Electronics | 0049 (0)89 520 462 110 | www.mouser.com | EU | Y | 100 | N/A | 0 € | N/A | 50 | 2,500+ | Y |
| Infineon | Mouser Electronics | 0049 (0)89 520 462 110 | www.mouser.com | EU | Y | 8,300 | N/A | 0 € | N/A | 50 | 2,500+ | Y |
| Intel | Mouser Electronics | 0049 (0)89 520 462 110 | www.mouser.com | EU | Y | 1,750 | N/A | 0 € | N/A | 50 | 2,500+ | Y |
| Maxim Integrated | Mouser Electronics | 0049 (0)89 520 462 110 | www.mouser.com | EU | Y | 14,050 | N/A | 0 € | N/A | 50 | 2,500+ | Y |
| Microchip | Mouser Electronics | 0049 (0)89 520 462 110 | www.mouser.com | EU | Y | 24,200 | N/A | 0 € | N/A | 50 | 2,500+ | Y |
| Micron Technology | Mouser Electronics | 0049 (0)89 520 462 110 | www.mouser.com | EU | Y | 600 | N/A | 0 € | N/A | 50 | 2,500+ | Y |
| Monolithic Power Systems (MPS) | Mouser Electronics | 0049 (0)89 520 462 110 | www.mouser.com | EU | Y | 850 | N/A | 0 € | N/A | 50 | 2,500+ | Y |
| Nexperia | Mouser Electronics | 0049 (0)89 520 462 110 | www.mouser.com | EU | Y | 7,600 | N/A | 0 € | N/A | 50 | 2,500+ | Y |
| Nordic Semiconductor | Mouser Electronics | 0049 (0)89 520 462 110 | www.mouser.com | EU | Y | 60 | N/A | 0 € | N/A | 50 | 2,500+ | Y |
| NXP | Mouser Electronics | 0049 (0)89 520 462 110 | www.mouser.com | EU | Y | 4,700 | N/A | 0 € | N/A | 50 | 2,500+ | Y |

| Manufacturer | Distributor | Telephone | Website | Location | Franchised Distributor | No. of Lines for Principle | Stock Value for Principle | Minimum Order Value | % Lead Free for Principle Range | No. of Technical Support Staff | Total No. of Staff | Buffer Stock Facility |
|---|---|---|---|---|---|---|---|---|---|---|---|---|
| ON Semiconductor | Mouser Electronics | 0049 (0)89 520 462 110 | www.mouser.com | EU | Y | 18,700 | N/A | 0 € | N/A | 50 | 2,500+ | Y |
| Power Integrations | Mouser Electronics | 0049 (0)89 520 462 110 | www.mouser.com | EU | Y | 750 | N/A | 0 € | N/A | 50 | 2,500+ | Y |
| Qorvo | Mouser Electronics | 0049 (0)89 520 462 110 | www.mouser.com | EU | Y | 700 | N/A | 0 € | N/A | 50 | 2,500+ | Y |
| Renesas Electronics | Mouser Electronics | 0049 (0)89 520 462 110 | www.mouser.com | EU | Y | 5,550 | N/A | 0 € | N/A | 50 | 2,500+ | Y |
| ROHM Semiconductor | Mouser Electronics | 0049 (0)89 520 462 110 | www.mouser.com | EU | Y | 6,900 | N/A | 0 € | N/A | 50 | 2,500+ | Y |
| Semtech | Mouser Electronics | 0049 (0)89 520 462 110 | www.mouser.com | EU | Y | 350 | N/A | 0 € | N/A | 50 | 2,500+ | Y |
| Silicon Laboratories | Mouser Electronics | 0049 (0)89 520 462 110 | www.mouser.com | EU | Y | 2,200 | N/A | 0 € | N/A | 50 | 2,500+ | Y |
| Skyworks | Mouser Electronics | 0049 (0)89 520 462 110 | www.mouser.com | EU | Y | 550 | N/A | 0 € | N/A | 50 | 2,500+ | Y |
| STMicroelectronics | Mouser Electronics | 0049 (0)89 520 462 110 | www.mouser.com | EU | Y | 10,050 | N/A | 0 € | N/A | 50 | 2,500+ | Y |
| Texas Instruments | Mouser Electronics | 0049 (0)89 520 462 110 | www.mouser.com | EU | Y | 39,050 | N/A | 0 € | N/A | 50 | 2,500+ | Y |
| Toshiba | Mouser Electronics | 0049 (0)89 520 462 110 | www.mouser.com | EU | Y | 2,050 | N/A | 0 € | N/A | 50 | 2,500+ | Y |
| Vishay | Mouser Electronics | 0049 (0)89 520 462 110 | www.mouser.com | EU | Y | 10,850 | N/A | 0 € | N/A | 50 | 2,500+ | Y |
| Xilinx | Mouser Electronics | 0049 (0)89 520 462 110 | www.mouser.com | EU | Y | 1,900 | N/A | 0 € | N/A | 50 | 2,500+ | Y |
| **INTERCONNECTION** | | | | | | | | | | | | |
| 3M | Mouser Electronics | 0049 (0)89 520 462 110 | www.mouser.com | EU | Y | 2,750 | N/A | 0 € | N/A | 50 | 2,500+ | Y |
| Amphenol | Mouser Electronics | 0049 (0)89 520 462 110 | www.mouser.com | EU | Y | 33,200 | N/A | 0 € | N/A | 50 | 2,500+ | Y |
| Amphenol | PEI Genesis | +44 8716060 | www.peigenesis.com | EU | Y | N/A | £1.3m | 10 € | N/A | N/A | 85 | Y |
| Cinch Connectivity Solutions | Mouser Electronics | 0049 (0)89 520 462 110 | www.mouser.com | EU | Y | 4,250 | N/A | 0 € | N/A | 50 | 2,500+ | Y |
| FCI / Amphenol | Mouser Electronics | 0049 (0)89 520 462 110 | www.mouser.com | EU | Y | 7,850 | N/A | 0 € | N/A | 50 | 2,500+ | Y |
| HARTING | Mouser Electronics | 0049 (0)89 520 462 110 | www.mouser.com | EU | Y | 6,800 | N/A | 0 € | N/A | 50 | 2,500+ | Y |
| Harwin | Mouser Electronics | 0049 (0)89 520 462 110 | www.mouser.com | EU | Y | 2,950 | N/A | 0 € | N/A | 50 | 2,500+ | Y |
| Hirose Electric | Mouser Electronics | 0049 (0)89 520 462 110 | www.mouser.com | EU | Y | 7,850 | N/A | 0 € | N/A | 50 | 2,500+ | Y |
| Hirose Electric Europe B.V | | 0031-(0)2 655 7460 | www.hirose.com/eu | EU | Y | 50,000 | N/A | 0 € | N/A | N/A | 4,190 | Y |
| ITT Cannon | PEI Genesis | +44 8716060 | www.peigenesis.com | EU | Y | N/A | £1.3m | 10 € | N/A | N/A | 85 | Y |
| JAE Electronics | Mouser Electronics | 0049 (0)89 520 462 110 | www.mouser.com | EU | Y | 1,450 | N/A | 0 € | N/A | 50 | 2,500+ | Y |
| Molex | Mouser Electronics | 0049 (0)89 520 462 110 | www.mouser.com | EU | Y | 23,600 | N/A | 0 € | N/A | 50 | 2,500+ | Y |
| ODU | | +49 8631 6156-0 | www.odu.de | EU, USA, ASIA | | | N/A | 0 € | N/A | 50 | 1,650 | |
| Phoenix Contact | Mouser Electronics | 0049 (0)89 520 462 110 | www.mouser.com | EU | Y | 17,150 | N/A | 0 € | N/A | 50 | 2,500+ | Y |
| Radiall | Mouser Electronics | 0049 (0)89 520 462 110 | www.mouser.com | EU | Y | 2,350 | N/A | 0 € | N/A | 50 | 2,500+ | Y |
| Samtec | Mouser Electronics | 0049 (0)89 520 462 110 | www.mouser.com | EU | Y | 16,300 | N/A | 0 € | N/A | 50 | 2,500+ | Y |
| Souriau | Mouser Electronics | 0049 (0)89 520 462 110 | www.mouser.com | EU | Y | 3,300 | N/A | 0 € | N/A | 50 | 2,500+ | Y |
| TE Connectivity | Mouser Electronics | 0049 (0)89 520 462 110 | www.mouser.com | EU | Y | 41,850 | N/A | 0 € | N/A | 50 | 2,500+ | Y |
| Wurth Elektronik | Mouser Electronics | 0049 (0)89 520 462 110 | www.mouser.com | EU | Y | 1,650 | N/A | 0 € | N/A | 50 | 2,500+ | Y |
| **OPTO ELECTRONICS** | | | | | | | | | | | | |
| Broadcom Limited | Mouser Electronics | 0049 (0)89 520 462 110 | www.mouser.com | EU | Y | 2,300 | N/A | 0 € | N/A | 50 | 2,500+ | Y |
| Cree, Inc. | Mouser Electronics | 0049 (0)89 520 462 110 | www.mouser.com | EU | Y | 3,800 | N/A | 0 € | N/A | 50 | 2,500+ | Y |
| Intel | Mouser Electronics | 0049 (0)89 520 462 110 | www.mouser.com | EU | Y | 20 | N/A | 0 € | N/A | 50 | 2,500+ | Y |
| Osram Opto Semiconductor | Mouser Electronics | 0049 (0)89 520 462 110 | www.mouser.com | EU | Y | 1,300 | N/A | 0 € | N/A | 50 | 2,500+ | Y |
| Toshiba | Mouser Electronics | 0049 (0)89 520 462 110 | www.mouser.com | EU | Y | 450 | N/A | 0 € | N/A | 50 | 2,500+ | Y |
| Vishay | Mouser Electronics | 0049 (0)89 520 462 110 | www.mouser.com | EU | Y | 2,350 | N/A | 0 € | N/A | 50 | 2,500+ | Y |
| **PASSIVES** | | | | | | | | | | | | |
| AVX | Mouser Electronics | 0049 (0)89 520 462 110 | www.mouser.com | EU | Y | 17850 | N/A | 0 € | N/A | 50 | 2,500+ | Y |
| Bourns | Mouser Electronics | 0049 (0)89 520 462 110 | www.mouser.com | EU | Y | 15,100 | N/A | 0 € | N/A | 50 | 2,500+ | Y |
| Coilcraft | Mouser Electronics | 0049 (0)89 520 462 110 | www.mouser.com | EU | Y | 5,750 | N/A | 0 € | N/A | 50 | 2,500+ | Y |
| EPCOS / TDK | Mouser Electronics | 0049 (0)89 520 462 110 | www.mouser.com | EU | Y | 5,450 | N/A | 0 € | N/A | 50 | 2,500+ | Y |
| KEMET | Mouser Electronics | 0049 (0)89 520 462 110 | www.mouser.com | EU | Y | 23,650 | N/A | 0 € | N/A | 50 | 2,500+ | Y |
| Kemet | RS Components | 08457 201201 | www.rs-components.com | EU | Y | N/A | £161m | 0 € | N/A | 50+ | 2,500 | Y |
| Murata | Mouser Electronics | 0049 (0)89 520 462 110 | www.mouser.com | EU | Y | 18700 | N/A | 0 € | N/A | 50 | 2,500+ | Y |
| Ohmite | Mouser Electronics | 0049 (0)89 520 462 110 | www.mouser.com | EU | Y | 6,550 | N/A | 0 € | N/A | 50 | 2,500+ | Y |

| Manufacturer | Distributor | Telephone | Website | Location | Franchised Distributor | No. of Lines for Principle | Stock Value for Principle | Minimum Order Value | % Lead Free for Principle Range | No. of Technical Support Staff | Total No. of Staff | Buffer Stock Facility |
|---|---|---|---|---|---|---|---|---|---|---|---|---|
| Panasonic | Mouser Electronics | 0049 (0)89 520 462 110 | www.mouser.com | EU | Y | 25,450 | N/A | 0 € | N/A | 50 | 2,500+ | Y |
| Taiyo Yuden | Mouser Electronics | 0049 (0)89 520 462 110 | www.mouser.com | EU | Y | 5,100 | N/A | 0 € | N/A | 50 | 2,500+ | Y |
| TDK | Mouser Electronics | 0049 (0)89 520 462 110 | www.mouser.com | EU | Y | 13,050 | N/A | 0 € | N/A | 50 | 2,500+ | Y |
| TE Connectivity | Mouser Electronics | 0049 (0)89 520 462 110 | www.mouser.com | EU | Y | 11,500 | N/A | 0 € | N/A | 50 | 2,500+ | Y |
| TT Electronics | Mouser Electronics | 0049 (0)89 520 462 110 | www.mouser.com | EU | Y | 5,050 | N/A | 0 € | N/A | 50 | 2,500+ | Y |
| Vishay | Mouser Electronics | 0049 (0)89 520 462 110 | www.mouser.com | EU | Y | 43850 | N/A | 0 € | N/A | 50 | 2,500+ | Y |
| Würth Elektronik | Mouser Electronics | 0049 (0)89 520 462 110 | www.mouser.com | EU | Y | 6,750 | N/A | 0 € | N/A | 50 | 2,500+ | Y |
| Würth Elektronik | Würth Elektronik | +49 (0) 7942 945 0 | www.we-online.com | EU | Y | N/A | N/A | 0 € | 100% | 250 | 4,000 | Y |
| Yageo | Mouser Electronics | 0049 (0)89 520 462 110 | www.mouser.com | EU | Y | 21,450 | N/A | 0 € | N/A | 50 | 2,500+ | Y |
| **POWER & BATTERIES** | | | | | | | | | | | | |
| RECOM Power GmbH | Various Distributor | +43 7612 88 325 700 | www.recom-power.com | | | | | 0 € | 100% | 3 | 560 | Y |
| Sanyo Electronic Industries Co., Ltd. | Sanyo Electronic Industries Co., Ltd. | +81 36699 8080 | www.eta.co.jp | JP | N | 1,000 | €3000k | 20 € | 90% | 10 | 100 | Y |
| Bel Power Solutions | Mouser Electronics | 0049 (0)89 520 462 110 | www.mouser.com | EU | Y | 600 | N/A | 0 € | N/A | 50 | 2,500+ | Y |
| CUI Inc. | Mouser Electronics | 0049 (0)89 520 462 110 | www.mouser.com | EU | Y | 2,200 | N/A | 0 € | N/A | 50 | 2,500+ | Y |
| MEAN WELL | Mouser Electronics | 0049 (0)89 520 462 110 | www.mouser.com | EU | Y | 4,400 | N/A | 0 € | N/A | 50 | 2,500+ | Y |
| Murata | Mouser Electronics | 0049 (0)89 520 462 110 | www.mouser.com | EU | Y | 1500 | N/A | 0 € | N/A | 50 | 2,500+ | Y |
| RECOM | Mouser Electronics | 0049 (0)89 520 462 110 | www.mouser.com | EU | Y | 3,150 | N/A | 0 € | N/A | 50 | 2,500+ | Y |
| TDK-Lambda | Mouser Electronics | 0049 (0)89 520 462 110 | www.mouser.com | EU | Y | 1,900 | N/A | 0 € | N/A | 50 | 2,500+ | Y |
| TRACO Power | Mouser Electronics | 0049 (0)89 520 462 110 | www.mouser.com | EU | Y | 4,000 | N/A | 0 € | N/A | 50 | 2,500+ | Y |
| Vicor | Mouser Electronics | 0049 (0)89 520 462 110 | www.mouser.com | EU | Y | 2,300 | N/A | 0 € | N/A | 50 | 2,500+ | Y |
| XP Power | Mouser Electronics | 0049 (0)89 520 462 110 | www.mouser.com | EU | Y | 2,200 | N/A | 0 € | N/A | 50 | 2,500+ | Y |
| **SENSORS** | | | | | | | | | | | | |
| ams | Mouser Electronics | 0049 (0)89 520 462 110 | www.mouser.com | EU | Y | 150 | N/A | 0 € | N/A | 50 | 2,500+ | Y |
| Analog Devices Inc. | Mouser Electronics | 0049 (0)89 520 462 110 | www.mouser.com | EU | Y | 300 | N/A | 0 € | N/A | 50 | 2,500+ | Y |
| Bosch | Mouser Electronics | 0049 (0)89 520 462 110 | www.mouser.com | EU | Y | 25 | N/A | 0 € | N/A | 50 | 2,500+ | Y |
| Honeywell | Mouser Electronics | 0049 (0)89 520 462 110 | www.mouser.com | EU | Y | 2,200 | N/A | 0 € | N/A | 50 | 2,500+ | Y |
| Maxim Integrated | Mouser Electronics | 0049 (0)89 520 462 110 | www.mouser.com | EU | Y | 350 | N/A | 0 € | N/A | 50 | 2,500+ | Y |
| NXP | Mouser Electronics | 0049 (0)89 520 462 110 | www.mouser.com | EU | Y | 300 | N/A | 0 € | N/A | 50 | 2,500+ | Y |
| Sensirion | Mouser Electronics | 0049 (0)89 520 462 110 | www.mouser.com | EU | Y | 80 | N/A | 0 € | N/A | 50 | 2,500+ | Y |
| STMicroelectronics | Mouser Electronics | 0049 (0)89 520 462 110 | www.mouser.com | EU | Y | 75 | N/A | 0 € | N/A | 50 | 2,500+ | Y |
| TE Connectivity | Mouser Electronics | 0049 (0)89 520 462 110 | www.mouser.com | EU | Y | 650 | N/A | 0 € | N/A | 50 | 2,500+ | Y |
| Texas Instruments | Mouser Electronics | 0049 (0)89 520 462 110 | www.mouser.com | EU | Y | 850 | N/A | 0 € | N/A | 50 | 2,500+ | Y |
| **SWITCHES & KEYBOARDS** | | | | | | | | | | | | |
| Apem | Mouser Electronics | 0049 (0)89 520 462 110 | www.mouser.com | EU | Y | 2,850 | N/A | 0 € | N/A | 50 | 2,500+ | Y |
| C&K Switches | Mouser Electronics | 0049 (0)89 520 462 110 | www.mouser.com | EU | Y | 5,550 | N/A | 0 € | N/A | 50 | 2,500+ | Y |
| CHERRY | RS Components | 08457 201201 | www.rs-components.com | EU | Y | 600 | N/A | 0 € | N/A | 50+ | 3,500+ | Y |
| E-Switch | Mouser Electronics | 0049 (0)89 520 462 110 | www.mouser.com | EU | Y | 2,350 | N/A | 0 € | N/A | 50 | 2,500+ | Y |
| EAO | Mouser Electronics | 0049 (0)89 520 462 110 | www.mouser.com | EU | Y | 1,800 | N/A | 0 € | N/A | 50 | 2,500+ | Y |
| Honeywell | Mouser Electronics | 0049 (0)89 520 462 110 | www.mouser.com | EU | Y | 4,700 | N/A | 0 € | N/A | 50 | 2,500+ | Y |
| NKK Switches | Mouser Electronics | 0049 (0)89 520 462 110 | www.mouser.com | EU | Y | 4,000 | N/A | 0 € | N/A | 50 | 2,500+ | Y |
| Omron | Mouser Electronics | 0049 (0)89 520 462 110 | www.mouser.com | EU | Y | 4,700 | N/A | 0 € | N/A | 50 | 2,500+ | Y |
| Panasonic | Mouser Electronics | 0049 (0)89 520 462 110 | www.mouser.com | EU | Y | 550 | N/A | 0 € | N/A | 50 | 2,500+ | Y |
| TE Connectivity | Mouser Electronics | 0049 (0)89 520 462 110 | www.mouser.com | EU | Y | 1,350 | N/A | 0 € | N/A | 50 | 2,500+ | Y |
| **TERMNINAL BLOCKS** | | | | | | | | | | | | |
| Molex | Mouser Electronics | 0049 (0)89 520 462 110 | www.mouser.com | EU | Y | 1,850 | N/A | 0 € | N/A | 50 | 2,500+ | Y |
| Phoenix Contact | Mouser Electronics | 0049 (0)89 520 462 110 | www.mouser.com | EU | Y | 13,550 | N/A | 0 € | N/A | 50 | 2,500+ | Y |
| TE Connectivity | Mouser Electronics | 0049 (0)89 520 462 110 | www.mouser.com | EU | Y | 1,750 | N/A | 0 € | N/A | 50 | 2,500+ | Y |

## Buyers' Guide

| Manufacturer | Distributor | Telephone | Website | Location | Franchised Distributor | No. of Lines for Principle | Stock Value for Principle | Minimum Order Value | % Lead Free for Principle Range | No. of Technical Support Staff | Total No. of Staff | Buffer Stock Facility |
|---|---|---|---|---|---|---|---|---|---|---|---|---|
| **THERMAL MANAGEMENT** | | | | | | | | | | | | |
| Bergquist Company | Mouser Electronics | 0049 (0)89 520 462 110 | www.mouser.com | EU | Y | 250 | N/A | 0 € | N/A | 50 | 2,500+ | Y |
| Delta Electronics | Mouser Electronics | 0049 (0)89 520 462 110 | www.mouser.com | EU | Y | 700 | N/A | 0 € | N/A | 50 | 2,500+ | Y |
| ebm-papst | Mouser Electronics | 0049 (0)89 520 462 110 | www.mouser.com | EU | Y | 1,450 | N/A | 0 € | N/A | 50 | 2,500+ | Y |
| Materials Direct | Materials Direct | +44 (0)1908 222 211 | www.materials-direct.com | EU | N/A | N/A | £1,000,000 | 0 € | N/A | 5 | 55 | Y |
| Sanyo Denki | Mouser Electronics | 0049 (0)89 520 462 110 | www.mouser.com | EU | Y | 1,450 | N/A | 0 € | N/A | 50 | 2,500+ | Y |
| Universal Science | Universal Science | +44 (0)1908 222 211 | www.universal-science.com | EU | N/A | N/A | £1,000,000 | 0 € | N/A | 5 | 55 | Y |
| **TRANSFORMERS & INDUCTORS** | | | | | | | | | | | | |
| Bourns | Mouser Electronics | 0049 (0)89 520 462 110 | www.mouser.com | EU | Y | 4,900 | N/A | 0 € | N/A | 50 | 2,500+ | Y |
| Coilcraft | Mouser Electronics | 0049 (0)89 520 462 110 | www.mouser.com | EU | Y | 5,500 | N/A | 0 € | N/A | 50 | 2,500+ | Y |
| EPCOS / TDK | Mouser Electronics | 0049 (0)89 520 462 110 | www.mouser.com | EU | Y | 1,300 | N/A | 0 € | N/A | 50 | 2,500+ | Y |
| Murata | Mouser Electronics | 0049 (0)89 520 462 110 | www.mouser.com | EU | Y | 6,900 | N/A | 0 € | N/A | 50 | 2,500+ | Y |
| TDK | Mouser Electronics | 0049 (0)89 520 462 110 | www.mouser.com | EU | Y | 4,050 | N/A | 0 € | N/A | 50 | 2,500+ | Y |
| Vishay | Mouser Electronics | 0049 (0)89 520 462 110 | www.mouser.com | EU | Y | 1,200 | N/A | 0 € | N/A | 50 | 2,500+ | Y |
| Wurth Elektronik | Mouser Electronics | 0049 (0)89 520 462 110 | www.mouser.com | EU | Y | 3,400 | N/A | 0 € | N/A | 50 | 2,500+ | Y |
| **WIRELESS SOLUTIONS** | | | | | | | | | | | | |
| DIGI | Mouser Electronics | 0049 (0)89 520 462 110 | www.mouser.com | EU | Y | 200 | N/A | 0 € | N/A | 50 | 2,500+ | Y |
| Espressif | Mouser Electronics | 0049 (0)89 520 462 110 | www.mouser.com | EU | Y | 30 | N/A | 0 € | N/A | 50 | 2,500+ | Y |
| Laird Connectivity | Mouser Electronics | 0049 (0)89 520 462 110 | www.mouser.com | EU | Y | 100 | N/A | 0 € | N/A | 50 | 2,500+ | Y |
| Lantronix | Mouser Electronics | 0049 (0)89 520 462 110 | www.mouser.com | EU | Y | 25 | N/A | 0 € | N/A | 50 | 2,500+ | Y |
| Microchip | Mouser Electronics | 0049 (0)89 520 462 110 | www.mouser.com | EU | Y | 150 | N/A | 0 € | N/A | 50 | 2,500+ | Y |
| Murata | Mouser Electronics | 0049 (0)89 520 462 110 | www.mouser.com | EU | Y | 30 | N/A | 0 € | N/A | 50 | 2,500+ | Y |
| Silicon Laboratories | Mouser Electronics | 0049 (0)89 520 462 110 | www.mouser.com | EU | Y | 150 | N/A | 0 € | N/A | 50 | 2,500+ | Y |
| Texas Instruments | Mouser Electronics | 0049 (0)89 520 462 110 | www.mouser.com | EU | Y | 20 | N/A | 0 € | N/A | 50 | 2,500+ | Y |
| u-blox | Mouser Electronics | 0049 (0)89 520 462 110 | www.mouser.com | EU | Y | 10 | N/A | 0 € | N/A | 50 | 2,500+ | Y |

## PCB Buyers' Guide

| Manufacturer | Telephone | Website | Service Provided (i.e Broker, Manufacture &/or Repair) | Location | Approvals | Volume - Small, Medium, Large | Double-sided | Multi-layer 4-10/10-20/-20-30 | Metal PCBs | Flexi / Flexi-Rigid | Obsolescence Solutions | Modifications | Prototyping |
|---|---|---|---|---|---|---|---|---|---|---|---|---|---|
| Elvia PCB Group | +33 233 763 200 | www.gepcb.com | M/B | France, Tunisia, China | AS9100, PRI-NADCAP, ISO-TS16949, ESA, UL, ISO9001, ISO14001 | S/M/L | Y | 1-30 | Y | F, F/R | Y | Y | Y |
| Graphic Plc | 00441363 774874 | www.graphic.plc.uk | M | UK/China | AS9100, NADCAP, ISO 9001, AISO14001, OHSAS 18001, Mil 31032, Mil 55110, Mil 50884 | S/M/L | N | 4-10 | Y | Y | N | Y | Y |

## Contract Manufacturers Buyers' Guide

| Manufacturer | Telephone | Website | Turnover | Location | Approvals | Employees | Number of Surface Mount Lines | BGA Capacity | Lead Free Manufacturer | Prototyping | Design Capability | Full Turnkey | Cables and Harnessing |
|---|---|---|---|---|---|---|---|---|---|---|---|---|---|
| AWS Electronics Group | +44 (0)1782 753200 | www.awselectronicsgroup.com | £40m | UK & Slovakia | AS9100, ISO9001, 13485, 14001, TS16949, IPC-A-610 Class 3, NADCAP | 430 | 11 | Y | Y | Y | Y | Y | Y |

## Advert Index

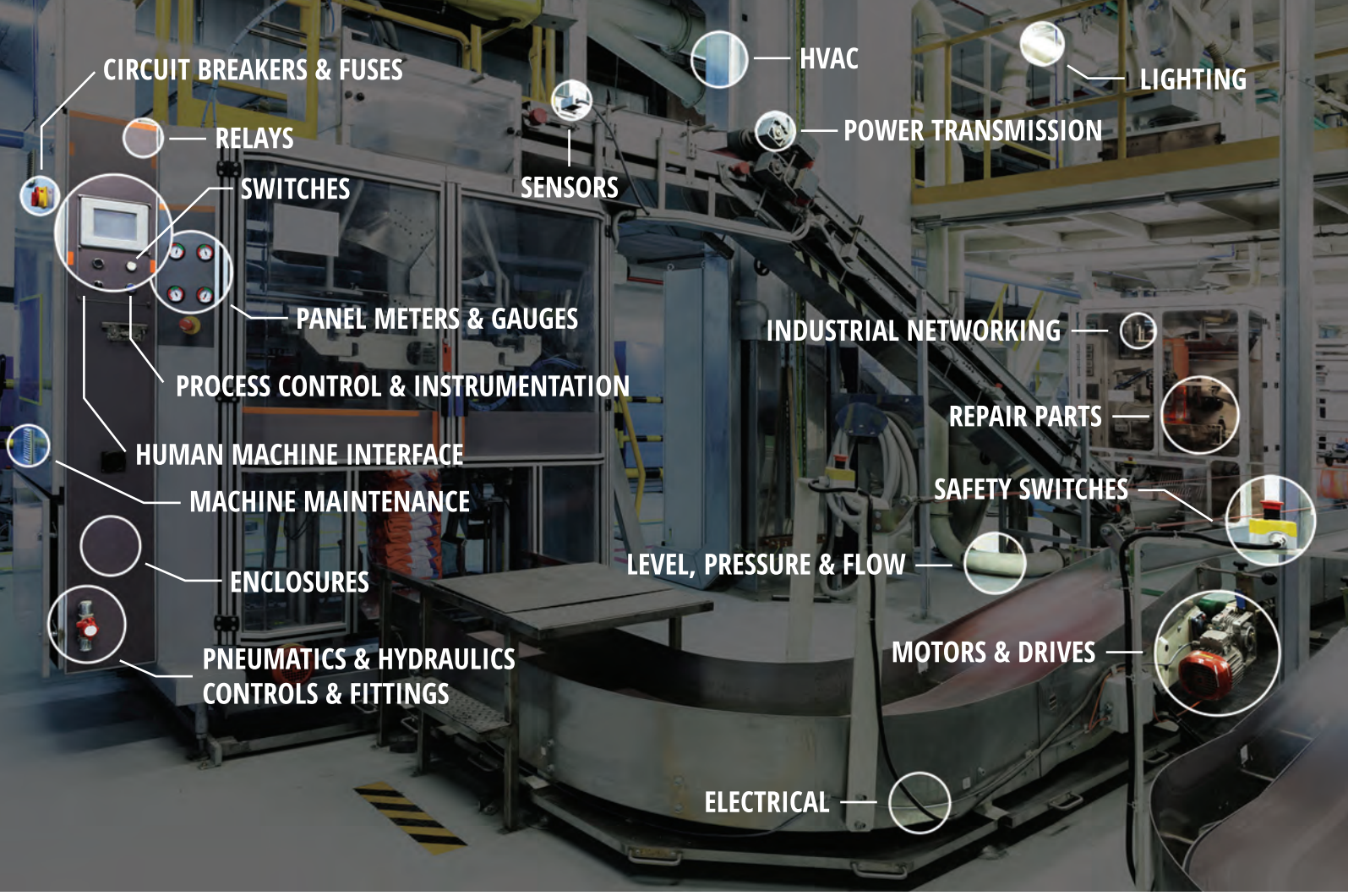


# MILLIONS OF PRODUCTS. THOUSANDS OF APPLICATIONS. YOUR GLOBAL RESOURCE.

## Your Source for Industrial Electronics & Automation

Finding the right part for the job has never been easier. Galco carries more than 3 million electrical products, with free technical support to help you find the part you need and get it quickly.

## WORLDWIDE SHIPPING

GALCO Galco.com • +1 888-851-0301