ELECTRONICS
sourcing
OCTOBER 2023
UK & IRELAND
AN MMG PUBLISHING TITLE

RESHORING, NEARSHORING, FRIENDSHORING

ALL PIECES IN THE SUPPLY CHAIN PUZZLE

PAGE 13

On the cover – October 2023

Reshoring, nearshoring, friendshoring: All pieces in the supply chain puzzle
page 13

Editor's Word

Where to make, where to buy?

On page 13 of this issue, John Denslinger discusses the benefits and limitations of reshoring, nearshoring and friendshoring. It's a topic which has been bubbling under the surface for at least 30-years since the offshoring phenomenon first started gaining pace. So, why has it resurfaced now? The answer is simple, nothing stays the same forever.

All the variables that made offshoring the only solution three decades ago have been, still are and will always be in a state of constant flux. At any point in time the sum of these variables either suggests offshoring is the right or wrong thing to do.

The list of variables is almost endless but obvious contributors include: state aid, demographics, raw material availability, energy costs, legislation, politics, war, intellectual property, economic expansion/recession and the volume/cost of money.

I don't own or operate an engineering OEM that outsources so I don't have real-time access to all these variables. Thus, to get a handle on the situation I've got a much simpler process. Every time I visit an engineering show I ask every stand I visit where its products are made.

My most recent show attendance was to an electric vehicle technology event. In answer to the above question, I was shocked. Every supplier fell into the local or nearshoring category. Some did also deploy offshoring but specifically to support local markets. Their answers did not stop there. In addition to their obvious pride in local manufacturing they were also keen to detail their recent and significant factory investments.

These are not discussions I have had for some time. This seems to be a sea change.

Jon Barrett

Contact

ELECTRONICS sourcing

EDITORIAL
Managing Editor: Jon Barrett
jonb@electronics-sourcing.co.uk
Contributing Editor: Amy Barker
amyb@electronics-sourcing.co.uk

ADVERTISING
Director of Sales: Emma Evernden
emma.evernden@electronics-sourcing.co.uk
Sales Executive: Alex Mosqueda
alex.mosqueda@electronics-sourcing.com
Sales Executive: Darren Tindal
darren.tindal@electronics-sourcing.co.uk

PRODUCTION & DESIGN
Production Manager: Jo McCarthy
jo.mccarthy@mmgpublishing.com
Creative Artworker: Tom Claydon-Smith
tom.claydon-smith@electronics-sourcing.co.uk
Social Media & Marketing Assistant:
Lucy Claydon-Smith
lucy.claydon-smith@electronics-sourcing.co.uk

CIRCULATION
Data & Software Analyst: Thomas Smart
thomas.smart@mmgpublishing.co.uk

PUBLISHER
Mark Leary
mark.leary@electronics-sourcing.co.uk
Director of Operations: Denise Pattenden
denise.pattenden@mmgpublishing.co.uk

Issue 208, Vol.19 No.10

Published 12 times per year
by MMG Publishing Limited
ANNUAL SUBSCRIPTION:
EU Countries £60 Rest of World £90

MMG PUBLISHING LTD
Suite 2, 1-3 Warren Court, Park Road,
Crowborough, East Sussex TN6 2QX
Tel: +44 (0)1892 613400
Fax: +44 (0)1892 613402
@Electrosourcing

Printed by: Pensord Press Ltd
Electronics Sourcing is printed on sustainably sourced paper stock
ISSN 2043-9504

N ES News

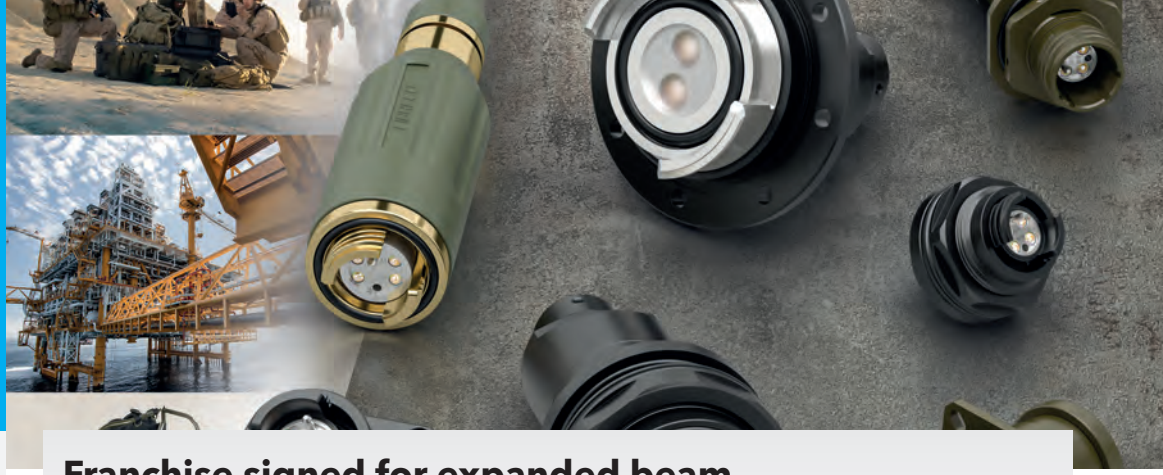

View current editions online

www.electronics-sourcing.co.uk

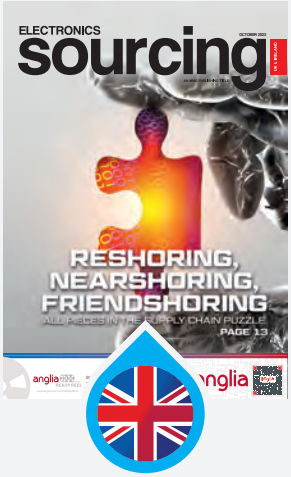

Franchise signed for expanded beam fibre-optic connectors

Lane Electronics has signed a new franchise agreement with Cinch Connectivity for distribution of the Fibreco range of expanded beam fibre-optic connectors across the UK and Europe.

The connectors and cable assemblies are designed to offer high performance, flexible, cost-effective solutions to critical harsh environment communication applications such as defence, aerospace, security, offshore, mining, outside broadcast and other industrial applications.

Lane Electronics will service existing UK customers and develop new business using in-house connector stock, value-added cable assemblies and back-to-back supply from the Fibreco facility where required.

Lane Electronics' sales director, Nick Wheeler, said: "This addition to our product portfolio will enhance our fibre-optic and harsh environment connector offering, adding value to a broad range of our existing and new customers with access to another prestige and globally recognised manufacturer."

Cinch Connectivity Solutions' European distribution manager, Keeley Jefferies, added: "Partnering with Lane Electronics with our Fibreco product range gives our customers a wide availability of our product portfolio with short turnaround times, and the ability to service small to large volume requirements."

www.fclane.com

10.1in industrial tablet suits any environment

Review Display Systems has announced a new 10.1in rugged mobile tablet from Aaeon. The RTC-1020 introduces a dedicated design and functionality for use in industrial, construction, manufacturing and inventory management applications.

The design addresses key usability issues encountered in industrial settings, such as enhanced battery capacity, improved screen readability and a preinstalled LTE module.

Features include IP65 environmental sealing and a -20 to 50°C operating temperature range. Certification to MIL-STD-810H drop and shock stress testing guarantees the tablet is rugged, durable and fit for use in heavy industry.

Radio Equipment Directive (RED) certified, the tablet can be purchased with a pre-installed LTE module, while the device also boasts an upgrade in Wi-Fi speed and bandwidth due to support for Wi-Fi 802.11 a/b/g/n/ac. For wireless navigation, the product supports up to three global navigation satellite systems, including GPS and Galileo, with GLONASS and BeiDou also supported.

Two hot-swappable 51.1W lithium-ion batteries allow continuous operation.

www.review-displays.co.uk

Unique construction for special conductivity

Kemet's Konnekt technology connects several MLCCs into a single surface-mountable component. This high-density housing technology connects components without a metal frame. This helps reduce equivalent series resistance (ESR), equivalent series inductance (ESL) and thermal resistance of capacitors.

The surface-mount U2J, KC-Link and C0G capacitors are primarily designed for power applications. Kemet's X7R series capacitors are used when higher capacitances and voltages are required. The capacitors are available with case sizes 1812, 2220 and 3640.

Konnekt technology uses an innovative transient liquid phase sintering (TLPS) material in which a low melting point metal or alloy reacts at low temperature with a high melting point metal or alloy to form a reactive metal matrix. The result is a highly conductive interconnect material that can be used to join multiple MLCCs. The result is stacked multi-chip devices without lead frames that can be aligned horizontally and vertically, making it easy to reduce the space required on the PCB.

www.rutronik24.com

SCALPEL PLEASE

This month's counterfeit investigation from Princeps shows even labels can hold clues–and that inspectors need a steady hand

This part was flagged as suspect before even the earliest stages of external visual examination. The packaging label (Fig 1) appears legitimate enough on first glance. However, inspectors spotted certain characteristics in the label's 2D barcode that have previously been observed on counterfeit parts purporting to be from this manufacturer.

On closer examination, it was evident these parts had been used before. The poor state of the pads (Fig 2) is a clear indicator. A secondary surface was also suspected, so a scrape test was conducted. This is an extremely skilled test, in which the technician must remove any secondary coating using a fresh scalpel, requiring a steady hand and gentle touch to preserve the surface.

The results of this test (Fig 3) expose the surface beneath the coating, so further investigation–in the form of a heated solvent test–was performed to completely remove the secondary coating.

When counterfeiters resurface parts, their first step is to abrade away the original surface. In this instance, so much of the original surface has been removed that the gold bond wires are now visible through the plastic encapsulation (Fig 4). As usual, these parts were reported to the ERAI and removed from the supply chain.

www.princeps.co.uk

Fig 1 Packaging, featuring suspect 2D barcode

Fig 2 Pads in poor condition indicate prior use

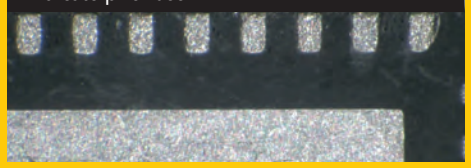

Fig 3 Scalpel blade and scrape test

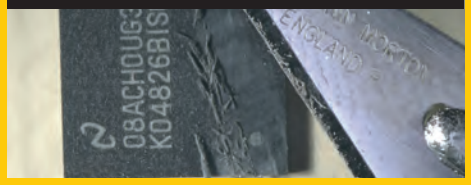

Fig 4 Arrows point to visible gold bond wires

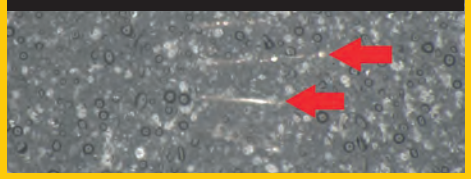

N
ES News

In Brief

Gripping partnership
Intertronics has partnered with Scigrip to distribute its methyl methacrylate structural adhesives (MMAs) in the UK. MMAs are fast curing, two-part adhesives that cure on mix at room temperature to form resilient bonds. They are ideal for structural bonding of metals, plastics and composites in industries like marine, transportation, rail and automotive.
www.intertronics.co.uk

Trusting AI to select components
A recent Farnell survey revealed 86 per cent of respondents trust AI to play some role in their component selection for designs. Over a fifth (23 per cent) said they would 'completely' trust AI to select components. However, the survey also indicated lingering concern about intentional or unintentional bias in AI systems.
uk.farnell.com

Connector made for challenging conditions
In partnership with TT Electronics AB Connectors, Aerco introduces what is claimed to be the lightest push-pull connector available in the marketplace today. Made from aerospace grade aluminium alloy, the connector's design offers weight savings up to 35 per cent over its nearest competitive product.
www.aerco.co.uk

Agreement covers specialty enclosures
Mouser Electronics has announced a new global distribution agreement with Phoenix Mecano. The company's suite of enclosures and accessories covers a wide array of applications in the electronic, industrial, automotive, medical, safety, measurement and control sectors. Phoenix Mecano produces standard and specialized products, which can be customized for specific applications.
www.mouser.co.uk

Enclosures boast new colour choice

OKW's flanged Mini-Data-Box plastic enclosures are now available in a new two-colour option as standard: the base is traffic grey A (RAL 7042); while the top is traffic white (RAL 9016).

This small, go-anywhere housing suits miniaturized electronics applications including IoT/IIoT, automation, security, environmental technology, measurement/control, smart logistics, peripherals, interfaces and ICT.

The enclosures are available with (or without) flanges for rapid installation using cable ties or screws, ideal for installing networks of sensors in smart factories.

Two shapes are offered: S (square) and E (edge/rectangular). Both feature diamond cut bevelling on the top, reducing weight. Ergonomic contoured corners enhance the aesthetics, and flat surfaces are provided for connectors.

An all-round tongue and groove joint and IP65 seal (accessory) are featured. Stainless steel Torx assembly screws deter tampering. Inside, are fixing supports for PCBs and components, top and bottom. Alternatively, potting of electronic assemblies is possible.

Four plan sizes range from 40 by 40mm to 70 by 50mm. The two heights are 15 and 20mm.

www.okw.co.uk

Distributor supports OEMs' GaN journey

Innoscience Technology has announced a distribution deal with Codico covering all European countries.

Innoscience's general manager, Europe, Dr Denis Marcon, said: "Most customers are only at the start of their journey with GaN products, therefore, even though our parts are rugged, reliable and easy to use, designers will need a lot of technical support as they transition from silicon to these WBG parts. We are confident that Codico is able to provide the technical expertise required to enable our customers to reap the benefits GaN offers."

Product management at Codico, Thomas Berner, added: "Innoscience offers both discrete and integrated GaN power solutions and is poised to be the world's largest dedicated GaN producer with two eight inch wafer fabs already in production. Therefore, having Innoscience on board supports our plans to grow in our target segments of industrial, renewable energies and e-mobility. Innoscience's high-performance and reliable GaN-Fets match our strategy to deliver technical state-of-the art components to our customer-base and complements to the drivers we already offer."

www.innoscience.com

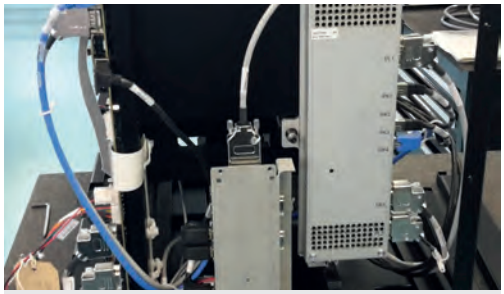

4,000 wires delivered

Convert has successfully delivered half a kilometre of cable harnesses to FFEI, an integrator and manufacturer of industrial digital inkjet systems and digital life science technology.

FFEI is using the assemblies for a large industrial printer which prints in layers and can have up to five print boards. To date, these required over 200 assemblies, each with between one and 40 wires, including assemblies measuring 90mm up to 2.5m.

Convert's managing director, Dave Lord, said: "The world of digital printing is changing rapidly and cable harnesses need to support this. FFEI has been at the forefront of these changes and it is fantastic that our assemblies are helping to support this."

FFEI added: "The wiring system is key to the safe and efficient operation of our digital printers, which are at the forefront of the industry, and we know that these harnesses do what they are meant to do, time and time again. We have relied on their timely delivery which has enabled us to deliver for our customers."

www.convertltd.co.uk

Performance inverter saves space and cost

McLaren Applied's new IPG5-x 800V SiC inverter targets growing OEM demand for high-performing, integrated electric drive units (EDUs) that save space and cost. The technology works with a variety of motors and transmissions, especially in performance applications.

The product is designed for collaboration with Tier 1 and OEM partners looking to bring EDU products to market quickly and cost effectively. McLaren Applied is in discussions with several OEMs and Tier 1 suppliers and is working with transmission provider Tremec to jointly develop an integrated EDU for its first customer vehicle application.

McLaren Applied's head of product, Paolo Bargiacchi, said: "We've developed the IPG5-x to be highly flexible, so it's ready to be integrated within any combination of motor and transmission. It carries over all of our standalone IPG5's qualities—peak efficiencies over 99 per cent, continuously variable switching and fine motor control—building on the maturity of that product."

www.mclarenapplied.com

Claim your free ESD survey and report

Desco Europe distributor Inelco Hunter has announced a 'no strings attached' free ESD static control survey and report. The written report provides feedback on existing ESD control programmes. There is no contract to sign, Inelco Hunter simply asks for the opportunity to quote on any ESD items that would improve the current ESD programme. Inelco Hunter is also discounting Desco ESD products ordered as a direct result of the survey.

Component miniaturisation has increased the potential for damage caused by electrostatic discharge. Discharges are small but the heat released can damage components. ESD risk is present during every stage of manufacture: handling, assembly, testing and shipping.

Using EN 61340-5-1 and its User Guide CLC/TR 61340-5-2, an ESD specialist takes onsite measurements and makes observations of the existing ESD control plan. The ESD survey will verify ESD products meeting EN-61340-5 standards. The written report will list applicable EN61340-5-1 and -2 citations and indicate whether the current ESD control programme complies and indicate where it does not.

www.inelcohunter.co.uk

Building strong PCB purchasing relationships

In this article, NCAB emphasises the importance of close supplier contact, tailored services and a decentralised infrastructure offering support at local level

Customers are attracted to suppliers who demonstrate effective project handling with efficient CRM systems, solid routines and processes for handling quotes, orders, forecasting and quality issues, allowing continuous strong communication and transparency. If processes are solid, then staff changes or work absences are easily compensated by other members with minimal or no disruption to customers' experience.

To stay competitive and successful as a PCB supplier innovation is essential, including clear, concise strategies, investment in R&D and exploring new technologies/methods to meet demand. A competent supplier will support with technical expertise to maximise customers' designs for better performance, cost-effectiveness, design for manufacture and sustainability, instilling confidence that customers are in capable hands.

Sustainability strategy is governed by NCAB Group's management team, with a clear division of responsibility for the different focus areas. The strategy is linked to the UN's Sustainable Development Goals (SDGs).

Timely delivery is paramount to customers. A comprehensive and streamlined supply chain brings efficiency and lets customers' deadlines be realised without compromising quality. A dependable supplier understands the importance of on-time delivery and implements measures accordingly. Customers appreciate suppliers who are responsive and eager to address situations promptly, from design reviews to sales support: a trait pre-requisite of a successful relationship.

A successful supplier understands the importance of building long-term relationships. Rather than pursuing short-term gains, they aim for enduring partnerships with customers and going the extra mile to exceed expectations. Customers appreciate suppliers who adapt to their specific needs and it is critical suppliers show agility. This enhances the relationship and cultivates loyalty.

Non-negotiable traits are quality and reliability. Customers seek this as 'absolute' as any defects or failures can lead to damaging consequences. Reliable PCBs are created through the right designs produced in the right factory. NCAB selects factories, continuously monitors and works to improve all aspects of production.

In the company's main factories, teams are handpicked and trained to work exclusively on NCAB's PCB production. This systematic approach maximizes the factories' performance. A reputable supplier understands this requirement and invests in robust quality control measures—adhering to industry standards such as ISO9001 and ISO14001. A robust supply chain with contingency plans to address unexpected disruptions is one customers can rely on even in challenging circumstances.

www.ncabgroup.com/united-kingdom

> **A comprehensive and streamlined supply chain brings efficiency and lets customers' deadlines be realised without compromising quality**

Inhouse PCB production supports product customisation

Electron Electronics encourages OEMs to use inhouse PCB production to add extra value to their business by offering clients rapid product customisation services

Original equipment manufacturers able to reengineer products for individual customers' needs are at a business advantage. However, one disadvantage is redesigning the PCB to accommodate changes, especially for one-off products. A simple solution is to produce PCBs inhouse for specialist requirements.

Artwork is still produced on the OEM's CAD system but is printed on laser or ink film. The printer should be set to its darkest settings as a poor print quality can result in PCBs failing QC.

Next, a UV unit exposes the artwork on to a photoresist on pre-sensitised laminate for two to three minutes. After exiting the lightbox, the laminate is placed into a developer solution between 30 to 60 seconds. The developer solution should be at room temperature as over developing a laminate can lead to PCBs failing QC after etching.

The laminate is then washed before placement in a heated (45°C) bubble etch tank of ferric chloride to etch the PCB. The ferric chloride should be agitated via a pump, with the etching process taking between five to 10 minutes. Using a Rota Spray 2 unit, time can be cut to 90 seconds. After etching the laminate should be washed.

The photoresist now needs removing. This is done using a scrub block or a resist stripper solution in a heated (45 to 50°C) tank for two to three minutes. Once the laminate is removed from the stripper solution it should be washed and dried. It is recommended that a scrub block is then used to ensure the circuit is perfectly clean.

The final process is immersing the laminate in a tin plate solution for seven to 15 minutes. This prevents the copper laminate oxidising and enhances solderability. This process is carried out at 20°C. After washing and drying the laminate, the PCB can be drilled before component population.

www.electronelec.co.uk

> **A simple solution is to produce PCBs inhouse for specialist requirements**

Exclusively sponsored by DigiKey

From **Prototype** to **Product** – Electronic Components Come **Full Circle**

by **Missy Hall,** vice president of new market development at **DigiKey**

As a longtime leader in distributing electronic components, DigiKey works with our customers to reach their customers. Historically, companies making the widgets, or components, for a machine or piece of technology weren't the same ones selling the final product. DigiKey is changing the game and supporting customers at key touchpoints of the technology lifecycle, including sales. We've always had the components to build products, but now we're selling the finished product too.

The Changing Customer Landscape

Until a few years ago, DigiKey had focused on what went into a product versus selling the finished product. This full circle approach isn't something that had been done in the technology/electronic component industry and DigiKey saw the potential to be a partner that could enable designs through the sale of components, but also provide an online marketplace to sell the customer's finished products.

In 2019, DigiKey launched an online marketplace to create a repository for engineers, technicians and general consumers across all industries to fulfill electronics and technology product needs in one place. By expanding its product offerings, DigiKey could offer semi-finished and finished products such as single board computers, plug and play sensors, industrial robots and consumer tooling. It now has over 2 million products available.

Since the launch in 2019, more than 40,000 new customers have used DigiKey's Marketplace to make a purchase, resulting in more than $25 million in sales. These initial results showcase the desire of DigiKey customers to not only buy traditional components, but to also utilize this growing sales platform for their finished products.

For customers and consumers, DigiKey's easy to use website and ordering process is no longer strictly used for B2B (business-to-business), but now being used as a B2C (business-to-consumer) marketplace, selling products for both business and personal use.

Full Circle Products

Many of the finished products on the DigiKey Marketplace likely had one or more components originally sourced from DigiKey. For example, a reel of LEDs shipped to a business customer could come back through the DigiKey website as a shop light fixture and be sold via Marketplace. Sometimes products can even enter and pass through DigiKey's doors multiple times in evolved forms.

Due to changing customer needs and interest, DigiKey continues to push into new areas of technology. Marketplace offerings go beyond components and related products and now includes Internet of Things (IoT) solutions, alternative energy, bare PCBs, tools to aid in industrial automation and more – selling virtually anything related to technology innovation.

Being able to serve our customers in a new way for us, and frankly the industry, is exciting for DigiKey. Now we're not only a partner for their upstream process, but we can also be a sales chain partner for the finished product's journey to the end customer.

Learn more at **www.digikey.co.uk**

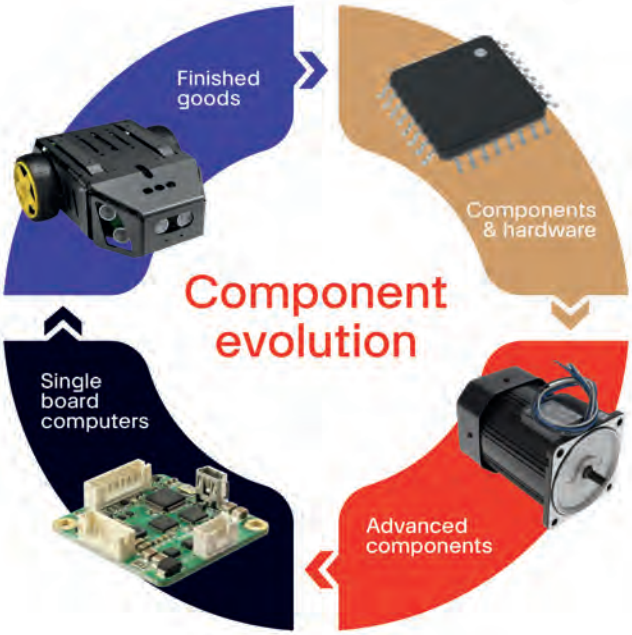

Reshoring, nearshoring, or friendshoring?

John Denslinger is a former executive VP Murata, president SyChip Wireless, and president/CEO ECIA, the industry's trade association. His career spans 40 years in electronics

This month, John Denslinger explores the benefits and limitations of reshoring, nearshoring and friendshoring, with a focus on the semiconductor ecosystem

China's economic grip on the world's supply chains ended with the pandemic shutdowns. The pandemic may have been the catalyst, but punitive tariffs, geo-political uneasiness and protectionist measures supported by hundreds of billions of Fed dollars in economic hand-outs helped usher in a new age of strategic sourcing. Across every industry it's quite evident manufacturers have decidedly pivoted from sole source, low-cost status quo to one that delivers diversification and resilience.

From a manufacturing perspective, offshoring appears to be dead. A new vocabulary has replaced it: reshoring, nearshoring and friendshoring. Each has unique deliverables and risks.

Reshoring

Reshoring is by far the most talked about of the three and basically brings business operations, manufacturing and sourcing functions back to the home country. A company trades the benefit of domestic location, flexibility, security, improved quality control, reduced logistical costs and proximity to local market against potentially higher labor and operating costs. It should be noted that smart companies mitigate these operational expenses by introducing robotics and AI tools during transition. Despite the apparent advantages, two issues still stand out:

1. There is a skilled worker shortage, with 82 per cent of US manufacturing companies saying they are experiencing a labor shortage according to a 2023 *Career Advancement in Manufacturing Report*. Competition for scarce talent likely drives up recruitment, training and retention expenses.

2. Reshoring requires significant initial capital investment. New facilities, state-of-the-art equipment and automation technology are expensive. If your business happens to be semiconductor or EV related, Federal subsidies may make the decision quite easy.

Nearshoring

Nearshoring relocates a business' operations to a neighboring country within the same region or continent. In this case, the company gets many of the advantages of reshoring but maintains much of the offshore benefit of lower labor costs. A good example is the proximity of Mexico to the US. While initial investment may be similar to reshoring, ample labor is generally available. Nearshoring still requires some outsourcing and reliance on local suppliers but the complexity is considerably less than the offshoring model. If a company is just looking for geographic proximity, real-time collaboration and better supply chain visibility at a lower cost, nearshoring seems a satisfactory solution.

Friendshoring

Only the government could invent this word. The definition seems loosely translated as locating manufacturing in countries with shared values, 'friends' so to speak. Who qualifies as a friend is somewhat undefined, but this trust-based relationship seems to hinge on a trading pact between nations. Friendshoring might be a workable solution for some such as the semiconductor industry. Questions remain though. Is a partner country in an unstable part of the world? Are there shipping bottlenecks and added inventory costs? What are the ESG compliance requirements? Is the ongoing regulatory environment favorable to business?

In the short-term semiconductor is ripe for friendshoring. Currently, 74 per cent of semi design is US based; 41 per cent of global equipment processing is US based; 57 per cent of global material processing is done in Taiwan, South Korea and Japan; 56 per cent of manufacturing capacity is concentrated in Taiwan, South Korea and Japan; and 38 per cent of global semi assembly is done in China (Deloitte article dated March 2022).

All these governments have committed funds to subsidize semiconductor production on home soil. It's not likely any country can possess the critical mass to dominate the complete semi supply line. America might find friendshoring adequately provides the security it seeks: design (US and EU), equipment (US, EU and Japan), materials (South Korea, Japan, US and EU), wafer fab (Taiwan, Japan, South Korea, US and EU) and assembly (India). There seems to be plenty of countries with shared values to make friendshoring work.

Considering quality, capability and flexibility

Pektron's head of European sales, Scott Quirie, highlights key considerations when sourcing electronic components or services for harsh environments

When sourcing components for harsh environments it is essential that the end product's performance characteristics are clear from the outset. Likewise, time should be devoted to finding a supplier who can deliver overall value for money as this pays long-term dividends.

Quality is critical. Find a supplier with outstanding credentials, quality standards and a proven track-record. Whether electronics face -40°C in a Siberian wasteland, the relentless 57°C heat and dust of the Saharan desert or the vibrations of agricultural machines, component failures are not acceptable.

Check the strength of the supplier's supply chain relationships. On-going global semi-conductor shortages will have stress-tested these, so ask how they performed and discover what relationships they have with major global component suppliers and distributors—useful when times are tough.

Capability is key. Is a supplier required who can design, develop, manufacture and test products in-house? A supplier with these skills can bring significant advantages in delivering on-time and within budget. Alternatively, is a design-for-manufacturing partner required to bring a product to life? Check references, as finding the right partner offers lasting benefits.

Flexibility is another consideration. Can the supplier modify a product's base version to create new versions quickly and cost-effectively? This is important to maximise initial development investment and helps with handling challenges like component shortages and obsolescence.

www.pektron.com

> **Find a supplier with outstanding credentials, quality standards and a proven track-record**

DfM for procurement professionals

In this article, Mouser's technical marketing manager for EMEA, Mark Patrick, looks at key steps often appearing in a design-for-manufacture process

Mouser Electronics' technical marketing manager for EMEA, **Mark Patrick**

Design for manufacture (DfM) was introduced as a conceptual way of ensuring challenges that appear in a project's later stages are given due consideration early on when easier and cheaper to address.

When embarking on a new project the start point will be the 'voice of the customer' embodied in a detailed specification. Achieving this specification is the design team/engineering department's responsibility. Initial steps are reviewing the specification and deriving a concept.

At this point, there are often as many questions as answers. Some will be answered by the specification, while others will need more input. Examples include:

- What is the product's operating environment?
- Is weight an important factor?
- If battery-powered, how long must the device operate between charges?
- Must any safety standards be met?
- How/where will users operate the device?

In larger organizations, the engineering department may have specific teams dedicated to disciplines such as mechanical, electronics hardware, software development and interface/user experience, while in smaller companies, several disciplines may be the responsibility of a single person.

Supply chain, manufacturing, quality, sales and marketing will also have roles to play in the project. Often this involves giving input and opinions on key trade-offs, such as adding a larger display (reducing battery life) or adding functionality (making the product larger). The whole team must buy into these balanced decisions.

Concept of DfM

DfM aims to ensure the project's later stages are considered from the outset, delivering a product that is easy to manufacture, whether in-house or subcontracted. Generally, the earlier stumbling blocks are

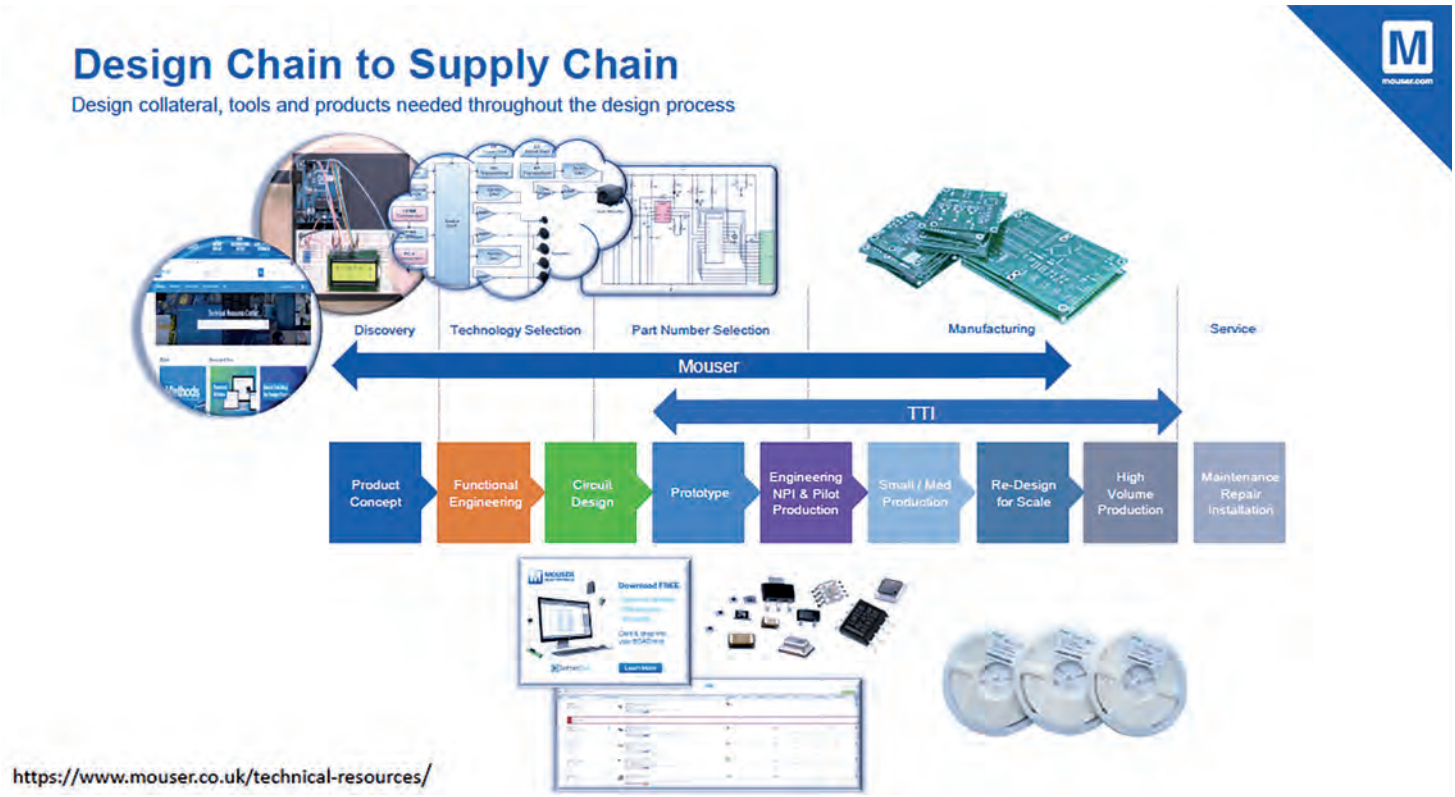

identified, the easier, quicker and cheaper they are to resolve. This is best achieved by integrating product design and process planning under a single responsibility.

Most projects will require consideration of:

• Purchasing raw materials

• Approved supplier policies

• Production planning

• Test engineering

Often a set of design and manufacturing guidelines is put in place to ensure the wider project team considers and meets all DfM requirements, plus other project goals.

Communication is key, so decisions can be shared, risks identified and solutions bought into. For example, a suitable microcontroller may be available but not from an approved supplier. Likewise, a novel component may save on BoM costs but require thousands of dollars in tooling. The team needs to agree, as decisions may spawn new tasks.

DfM for procurement professionals

While the supply chain will be involved in most aspects of the project, areas of particular focus include:

Component choice: Once the initial BoM is available, questions include:

• Is a component already being used elsewhere to benefit from economies of scale/reduced inventory? If not, is a suitable component being used elsewhere?

• Many common discrete semiconductors and ICs are available in different package types. If one type is already being purchased, why has engineering chosen a different type? Is production tooling available for the new style?

• Over-specification of tolerances drives costs up, especially with passive components, such as capacitors and resistors where tolerance is important. Check if the design can accept a lower tolerance or different material as both can impact cost and availability.

Component availability: No matter how simple a component, non-availability will prevent production. Consequences range from downtime costs to lost sales revenue.

• A BoM risk assessment should be conducted with components at risk of shortages identified. New suppliers should be qualified early, with trusted suppliers preferable.

• Design guidelines should include alternate components where possible. Sole-sourced components must be highlighted and signed off. A special supply chain approach may be needed, such as increasing inventory of these components.

• Tools exist for early obsolescence warning and should be used to identify problems.

Make or buy?: This decision depends on design complexity, approvals and planned sales volume. Often seen as an engineering decision, the ramifications are wide and varied. With availability of modules or system-on-chip (SoC) ICs, there is greater opportunity to purchase pre-configured solutions.

• Home-spun designs achieve exact parameters, although some challenges include power and safety. Modules will carry approvals, making end product approval easier and cheaper. They will also be optimized for efficiency, EMI and space.

• While a module may cost a little more, the hidden costs of parts inventory and assembly should be considered. Generally speaking, the lower the anticipated sales volume, the more modules stack up.

Risks while sourcing: Prevalence of counterfeit components makes securing the supply chain more important.

• There are many ways counterfeit components and modules can enter the supply chain. Working with reliable suppliers—approved by manufacturers—is important, as is insisting on full component traceability.

• Unscrupulous suppliers may repackage an unrelated device inside a package purporting to be another. While many are easily detected, some may operate similarly but lack performance. These can be time-consuming and costly to identify. Only thorough testing (including x-ray) can confirm legitimacy.

• In certain applications, such as medical, safety compliance is incredibly important. Full documentation should be supplied with components, with particular attention paid when standards are revised to ensure the components meet the latest version.

Global issues: Events such as natural disasters, pandemics, wars and market instability can affect supply of components or the raw materials they depend on.

• If sourcing from one region or sole-source suppliers, keep abreast of local news.

• Shortages of raw materials can affect supply. Components that could be affected should be visible to the supply chain team.

• Be aware of seasonal fluctuations—for example, components used in gaming consoles can be hard to source running up to Christmas.

• Depending on a company's ethical stance on issues such as the environment or modern slavery, ensure these issues are not lurking in the supply chain.

• A risk assessment for natural disasters is prudent, especially for factories susceptible to earthquakes or floods. This should include knowledge of whether the supplier uses sub-contractors as these can change and may alter the risk level.

Tools supporting DfM

Suppliers such as Mouser can advise on DFM strategies and provide helpful tools. For example, Mouser's Forte BoM tool offers a free, convenient way of managing BoMs with features including:

• Configurable BoM import

• Correct part confirmation via confidence indication

• Evaluation of possible stock and obsolescence issues

• BoM amendments directly within the tool

• Checking price breaks for multiple quantities

• Export, share and print out BOMs

www.mouser.co.uk

DfM aims to ensure the project's later stages are considered from the outset, delivering a product that is easy to manufacture, whether in-house or subcontracted

Why customising fans makes sense

Gelec introduces purchasing professionals to a range of benefits offered by customising fans at the point of manufacture rather than as a secondary operation

Thermal management is rarely amongst early project considerations but is often critical to a product's functionality and reliability. Careful fan selection can optimise performance and reliability but subtle customisations can maximise efficiency.

How can fans be customised? Fans are typically supplied with a generic lead length, no termination and often without the option of additional features, such as tacho feedback or pulse width modulation (PWM). This typically means a secondary process is required, prior to assembly, adding time and cost.

How do OEMs benefit from additional features? Tacho feedback offers many benefits. In addition to advance warning of service requirement, pinning performance to fan speed ensures cooling performance is controlled in every instance. Adjusting voltage to achieve specific RPM ensures the required level of air flow, whilst negating considerations given to batch variation and wear and tear over the fan's life.

On-board PWM is widely regarded as the optimal method of fan speed control, ensuring the correct balance between air flow, power consumption and noise. PWM via an additional wire carries a small premium but is the most effective speed control method, while removing potential reliability issues resulting from power-cycling.

Why should fan speed be controlled? Power consumption is at the forefront of everybody's mind, so the priority is minimising the supply needed for thermal management, making way for other, more desirable features. Right-sizing fan speed achieves the optimal balance of noise, air flow and power consumption, while also maximising reliability. Lower fan speeds typically reduces bearing temperatures and extends fan life.

Fans supplied 'production line ready'. Adjusting fan lead length and fitting connectors as a secondary process adds time, cost and an element of risk. Protecting the bearing is essential to maximising reliability and limiting avoidable handling is encouraged. Gelec's experience suggests incorporating mechanical needs—such as selecting lead length and connector termination—at the point of manufacture minimises risks and delivers cost savings.

Customers receiving fans customised to their requirements receive many benefits. Engaging Gelec early in the design stage maximises value and minimises risk. Manufacturing Sunon fans to customer's specifications guarantees authenticity and traceability, ensuring peace of mind that parts will meet expectations each and every time.

www.gelec.co.uk

Thermal gel minimises component stress

In this article, Parker Chomerics unveils Therm-a-Gap 50TBL, a dispensable thermal gel designed to excel in thin bond line applications including automotive electronic control units

Parker Chomerics' Therm-a-Gap 50TBL is a new dispensable thermal gel offering 5W/m-K bulk thermal conductivity. At a minimum bond line thickness of 0.05mm, the apparent thermal conductivity exceeds 10W/m-K.

With its TBL suffix standing for 'thin bond line', the gel needs no mixing or secondary curing, supporting simple application and rework potential. Flow rate is 25g/min using a 30cc syringe with 2.5mm orifice at 621kPa.

Another attribute is low compressive force to conform under assembly pressure, ensuring components, solder joints and leads encounter minimal stresses.

The company states the gel carries a formulation that accommodates today's high-performance, high-reliability electronic demands, while suiting automated dispensing machines and field repair situations.

Offering low thermal impedance and avoiding pump-out effect with temperature changes, applications for this thermal gel include: automotive electronic control units (ECUs), telecommunications base stations, consumer electronics, power supplies, semiconductors, LEDs, microprocessors and graphics processors. The material is primarily for thin bond lines and is not typically intended as a filler in gaps larger than 0.50mm.

Electrical properties include: 200Vac/mm dielectric strength (Chomerics test method); $10^{14}\Omega$cm volume resistivity (ASTM D257); 7.0 dielectric constant at 1000kHz (ASTM D150); and 0.002 dissipation factor at 1000kHz (Chomerics). RoHS-compliant, the material can operate at temperatures extending from -55 to 200°C.

The gel is available in syringe, cartridge and pail containers, offering standard fill volumes from 10 to 2500cc.

www.parker.com/chomerics

Power supply trends and innovations

Electronics Sourcing magazine quizzed Sunpower Electronics & Power LED's group CEO, Russell Parr, about trends in the power supply chain

From a purchasing perspective, what are the major changes or trends in the power supply chain?

For the most part, supply chain lead times have returned to pre-pandemic levels. There are a few exceptions but they are easily managed. In some cases, given the state of customers' overstock, manufacturers are reducing minimum order quantities (MOQs) to maintain ongoing production plans. As the situation is remedied and overstock reduces, it is likely that MOQs will return to higher levels.

If buyers are sourcing bespoke custom power supply units, what questions should they be asking suppliers?

The range of available power supplies can make it challenging to choose the right solution—and the right supplier. Firstly, buyers must look for power supply providers who really understand power and are prepared to entertain bespoke solutions. In many cases, suppliers lack the expertise or desire to entertain bespoke or modified solutions.

Thus, buyers should be investigating suppliers—rather than product specification—as the quality, reliability and performance of the latter will be determined by the former.

Supplier specifications should include: how long the company has been trading; who their key suppliers are; history of bespoke solutions; internal expertise; and whether they take a consultative approach. Essentially, their approach should start by determining what the customer is trying to achieve, rather than just thinking about power or cost.

That said, other factors to consider when optimising a power supply's performance include: voltage, current ratings, power capacity, compatibility, efficiency and reliability.

Additionally, higher-grade components should be non-negotiable as they ensure power supplies: offer good thermal behaviour, meaning all facets function safely; can withstand voltage spikes, which pose a particular challenge for control gear; boast a reduced ripple value, which serves as a solid performance indicator; have no-load, overload, thermal and short-circuit protection to resolve potential installation issues; and are EMC compliant, with appropriate testing and certification.

What advances can we expect from power supply manufacturers over coming years?

Manufacturers are increasingly looking at how more recycled material can be used during the manufacturing process, plus what percentage of a power supply can be recycled, especially as the industry continues to embrace the circular economy.

The drive to deliver better power factor and efficiency is ever-evolving and will become increasingly important in future purchasing decisions. As the world moves toward renewable energy, manufacturers need to ensure that current and future solutions are capable of managing power from various inputs and that remote performance reporting is available, given some renewable sources can be very remote.

www.sunpower-uk.com

> **The range of available power supplies can make it challenging to choose the right solution—and the right supplier**

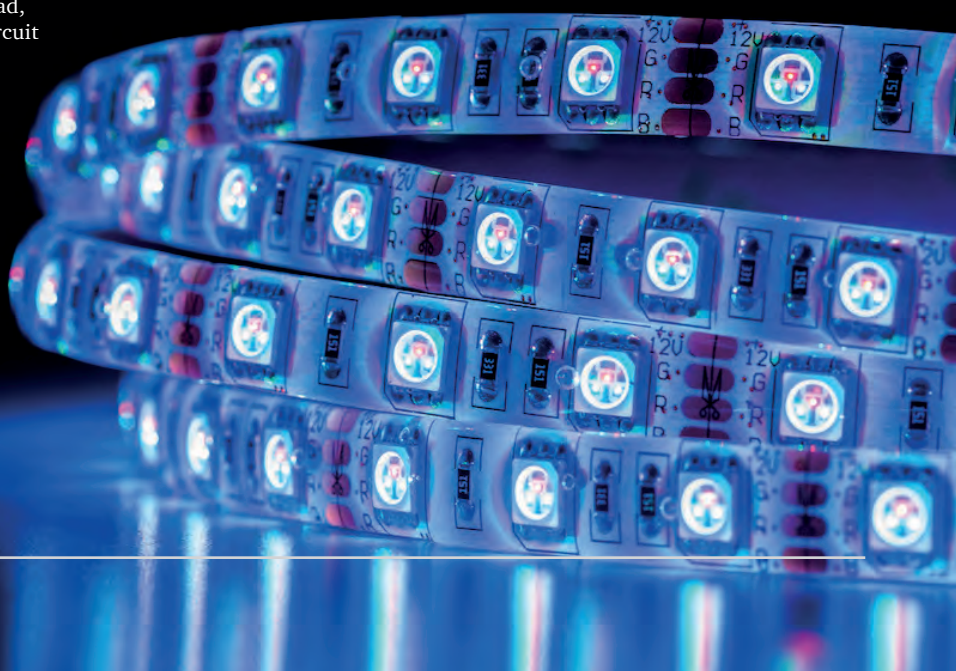

TechPoint Insights:

Surge in AI investment will extend electronic component lead times

Artificial intelligence is gathering momentum at pace. Nowhere is this more evident than when looking at investment trends in AI a few years ago compared to today.

According to Statista, back in 2016, investment in AI was less than $18 billion but in 2022 this figure ballooned to over $90 billion. The market for AI chips is growing rapidly, with Precedence Research predicting that it will exceed $227 billion by 2032.

That said, AI is incredibly energy-intensive and requires huge processing power which means semiconductor technologies will be critical to fuelling the AI revolution of the future. Although the increased demand will be beneficial to electronics manufacturers, it will trigger a knock-on effect on the 'bread-and-butter' markets which means shortages across all electronic sectors.

The boom in AI investment draws many parallels to the Electronics Vehicle (EV) surge seen during the pandemic which continues to have a lasting impact on chip manufacturers today. Despite the increased demand, chip manufacturers are unlikely to increase capacity significantly due to the last major market allocation in the late 90s and early 2000s.

Instead of AI and EVs, it was the mobile phone and telecoms boom which manufacturers reacted to by dramatically increasing capacity. However, almost overnight, chips went from being in high demand with limited supply to oversupply, leading to overstocking and lower prices.

TechPoint does not expect the market to react in the same way this time. With many semiconductor manufacturers operating with slim margins, this increase in demand is an opportunity to stabilise prices and avoid oversupplying the market which would bring prices down.

The message to customers is clear, there will not be the same opportunities to take advantage of lower prices and excess material. While lead times will ease, it is unlikely that they will return to pre-pandemic levels. We recommend keeping long-term order books and working closely with manufacturers and distributors as this is essential for effective planning and securing regular supply.

www.techpoint.co.uk

Unwrapping a cool one

In this article, Relec explores the features, benefits and specifications of Advanced Energy's LCC1200 ACDC converter series, plus support services underpinning the technology

Advanced Energy's LCC1200 ACDC converter series is engineered for performance and versatility, suiting applications including catering machines, industrial products, test/measurement equipment, telecommunications systems and more.

Focussing on efficiency and reliability, Relec states the LCC1200 series employs advanced power conversion to ensure efficient energy transfer, minimising power losses and enhancing overall system performance. The converters are also built to withstand harsh environmental conditions, for reliable operation in demanding industrial settings.

Understanding the differences between conduction and convection cooling is crucial when evaluating power converters. Conduction cooling involves direct physical contact between the converter and a cooling material with high thermal conductivity. Regarding the LCC1200 series, conduction cooling mitigates overheating without fans (which have limited life and reduce system reliability).

Convection cooling relies on movement of a fluid to dissipate heat. This method uses convection currents to carry heat away from the converter. Convection cooling techniques include heatsinks, fans or liquid cooling systems but require additional components and moving parts, adding to noise and cost while reducing reliability.

The choice between conduction and convection cooling depends on specific application requirements and environmental factors. Conduction cooling suits applications where direct contact cooling can be implemented, ensuring efficient heat transfer. The versatility and adaptability of convection cooling suits applications where heat dissipation is managed across a broader system or where conduction cooling is not feasible.

Key specifications of the LCC1200 series include:

Input voltage range: The converters support an input voltage range, typically spanning 85 to 264VAC. This flexibility lets the series accommodate different power sources and voltage variations.

Output power: The series provides a range of power options, with models from 400 to 1200W. This range ensures scalability and suitability for various applications, whether they require low or high-power output.

Efficiency: These converters offer efficiency levels often exceeding 90 per cent. Operating at this efficiency reduces power consumption and minimizes energy wastage, resulting in cost savings and environmental benefits.

Operating temperature: The series is designed to operate reliably across a broad temperature range, with many

models functioning in temperatures ranging from -40 to 85°C, suiting extreme operating conditions.

Protections and safety features: The converters are equipped with protection mechanisms to ensure safe and reliable operation, including: overvoltage, overcurrent, short-circuit and over-temperature protection. Integrated safeguards protect the converter and connected equipment, enhancing system longevity and minimising risk of damage.

For Relec Electronics' customers, the purchasing process starts with a methodical, tailored approach focused on ensuring specific requirements are met. The journey begins with a request via phone, email or webform, which triggers a response from a team of qualified engineers. Rather than selling, the goal is to understand, so before discussing potential solutions, the mission is to comprehend the application's intricacies.

A standard solution is the starting point. Relec recognises that every project has nuances and unique requirements. Thus, when suitable, initial recommendations are refined. This refinement can introduce bespoke features that add value to the application. This approach ensures the solution isn't just fit-for-purpose but tailor-made for the customer.

www.relec.co.uk

The converters are also built to withstand harsh environmental conditions, for reliable operation in demanding industrial settings

EMC: opportunities and challenges 2023 and beyond

As electronics advances, a common design concern centers on how electronic products perform in ever-changing EMC environments, Kyocera AVX explains

Although engineering teams design EMC hardness into their systems early in the design process last minute changes or design additions can occur. This complicates the purchasing process given component lead times in today's post pandemic environment. Given the availability of EMC solutions could shut down manufacturing and shipping, a high-level discussion of EMC trends, solutions and industry efforts is in order.

EMC challenges

Regulations and advanced semiconductors are two trends making it harder for design teams to meet EMC system requirements.

Firstly, government and regulatory agency performance requirements are generally expanding and getting more stringent over time. More device types fall into the regulation's intent and tighter requirements are being applied to some existing designs. Generally speaking, designers know what performances are needed but those goal lines are evolving over time.

Secondly, to achieve the added functionality typical in new electronic devices, designers might choose the latest, most powerful ICs. That may translate into lower voltage rails, faster speeds and smaller internal geometries—all rendering the system more likely to emit radiation and be more susceptible to radiation or transient effects. Even older ICs have potential for new EMC issues since manufacturers may shrink die sizes and geometries to cost reduce older technology ICs.

> **Generally speaking, designers know what performances are needed but those goal lines are evolving over time**

Either scenario can translate to the first BoM sent to purchasing being revised late in the process due to changes implemented to pass EMC regulations. A possible worst-case scenario is no PCB room for revisions, requiring a board spin and new components.

Opportunities

Several component manufacturers have noted the changing regulations and possibility of unforeseen design performance potentially creating a nightmare scenario for purchasing groups and design engineers.

Multilayer varistors (MLVs) are a single package component with the equivalent performance of two discrete components: a capacitor and bi-directional transient voltage suppression (TVS diode). This combination lets designers achieve both EMC filtering and transient suppression without a board layout change.

MLVs have electrical advantages designers find attractive, such as a broad range of electrical characteristics, high current and transient energy capability. Quality teams find MLVs attractive since they offer increased reliability and multiple grades of certified quality performance. Board layout and manufacturing teams find MLVs attractive since two components are in a single package, saving pick and place time.

An example of before (three components) and after (one MLV) is shown opposite. The MLV can be placed on the capacitor pad and offers better electrical performance than the three components shown in the before configuration. Board space and weight is greatly reduced.

Finally, purchasing teams find MLVs to potentially be a cost reduction with multiple manufacturers and short lead times.

www.kyocera-avx.com

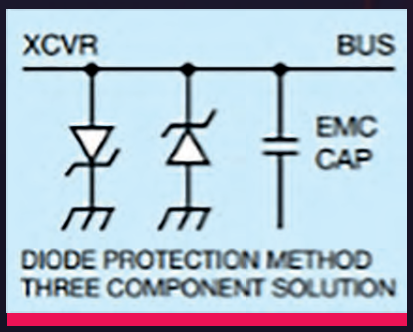

Before: two diodes, plus capacitor

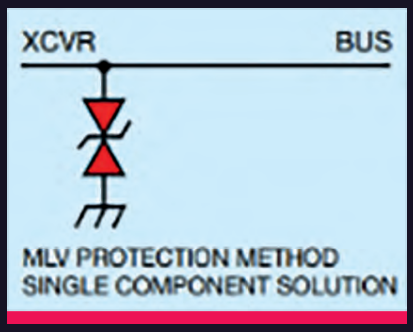

Single component solution

Either scenario can translate to the first BoM sent to purchasing being revised late in the process due to changes implemented to pass EMC regulations. A possible worst-case scenario is no PCB room for revisions, requiring a board spin and new components.

Opportunities

Several component manufacturers have noted the changing regulations and possibility of unforeseen design performance potentially creating a nightmare scenario for purchasing groups and design engineers.

Multilayer varistors (MLVs) are a single package component with the equivalent performance of two discrete components: a capacitor and bi-directional transient voltage suppression (TVS diode). This combination lets designers achieve both EMC filtering and transient suppression without a board layout change.

MLVs have electrical advantages designers find attractive, such as a broad range of electrical characteristics, high current and transient energy capability. Quality teams find MLVs attractive since they offer increased reliability and multiple grades of certified quality performance. Board layout and manufacturing teams find MLVs attractive since two components are in a single package, saving pick and place time.

An example of before (three components) and after (one MLV) is shown opposite. The MLV can be placed on the capacitor pad and offers better electrical performance than the three components shown in the before configuration. Board space and weight is greatly reduced.

Finally, purchasing teams find MLVs to potentially be a cost reduction with multiple manufacturers and short lead times.

www.kyocera-avx.com

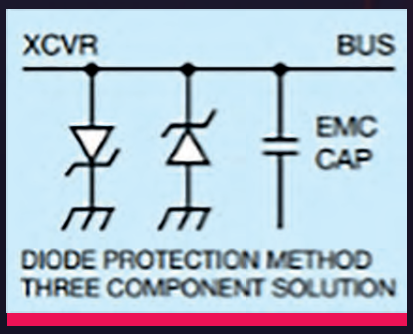

Before: two diodes, plus capacitor

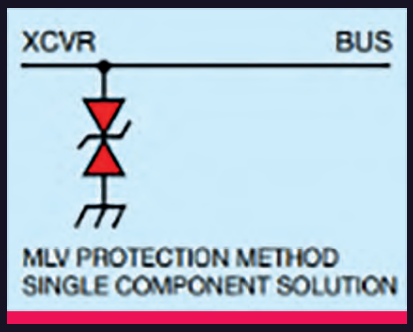

Single component solution

Ten tips for tackling EMC

Machine control panels are susceptible to electromagnetic interference so SCHURTER is offering purchasing professionals ten tips to sidestep this potential problem

When developing applications to comply with the electromagnetic compatibility directive (EMC), consider these ten essential factors:

1. Compliance awareness: Begin by understanding relevant EMC standards/regulations, especially if products are CE marked and destined for the European market. For specialised applications like medical equipment, specific EMC requirements apply.

2. Early EMC integration: Initial concept and design stages should consider EMC. Early attention prevents later design alterations. Identifying EMC-sensitive components or processes before the engineering phase helps avoid costly revisions.

3. Environmental assessment: Understand the operating environment. Evaluate external radiation sources and potential for interference. Additionally, examine internal electronics as they can emit electromagnetic radiation.

4. Prevention is key: While control panels can be modified to enhance EMC, it's often easier to minimise emissions from the surrounding environment and bolster immunity beforehand. Consider measures such as adding filters to interference sources or using shielding.

5. Component selection: Opt for materials and components known for high immunity to electromagnetic interference. Insulated cables and suppression components can significantly contribute to achieving desired EMC levels.

6. Software solutions: Software can mitigate radiation-induced interference by shifting working frequency to a less congested band, a technique known as frequency hopping. This approach ensures uninterrupted operation despite interference.

7. Pre-compliance testing: Conducting EMC tests during development provides clarity about the application's performance. It's more efficient and cost-effective to make adjustments early.

8. Technology choices: While PCAP touchscreens are popular, alternatives like membrane switches, push buttons or resistive touchscreens may suit some applications due to lower sensitivity to electromagnetic radiation or the possibility of complete shielding.

9. Housing design: Optimise the control panel's housing by integrating dense metal enclosures acting as Faraday cages. Seal openings for cables with radiation-resistant adaptations to maximise immunity.

10. Co-engineering: Collaboration with EMC specialists is essential during development. As a custom control panel manufacturer, SCHURTER offers specialised EMC expertise to the design, production and integration of control panels across various sectors.

www.schurter.com

Begin by understanding relevant EMC standards/regulations, especially if products are CE marked and destined for the European market

Space success for 1.25mm connectors

Harwin's high-reliability Gecko connectors have been integrated into a research nanosatellite, successfully launched and ejected into low Earth orbit (LEO).

The connectors join the High-reliability Embedded Device for Visual Imaging Goals payload (cameras) with the Integrated Payload Controller and AIOB-X core. Engineers at Hungarian aerospace company C3S selected the Gecko 1.25mm pitch connectors to bridge between the payload and controller.

C3S' aerospace hardware and system engineer, László Bagó, said: "They can carry a substantial current at 1.25mm pitch, have very low outgassing parameters (crucial when dealing with optics) and one can choose between a wide variety of fixing and shielding options, as well as cable assemblies."

The connector's glass-filled thermoplastic housings weigh less than comparable Micro-D, while retaining necessary insulation characteristics. These housings can cope with exposure to extreme temperature levels spanning from -65 to 150°C. In addition, the beryllium copper contacts' four-finger design ensures resilience to shock and vibration during launch.

www.harwin.com

World's smallest industrial two-axis Hall effect joystick?

Live Electronics has introduced what it believes is the world's smallest two-axis Hall effect joystick. Measuring 17.5mm high above panel and 18mm in diameter, the TS2 joystick is an IP67, analogue self-centring device, designed for use with remotely operated equipment, robotics/automation systems, drones and CCTV controllers.

The TS2 is based on proven Hall effect technology, designed to provide accurate, easy to control 12-bit resolution in X and Y axes. The joystick offers tactile feedback and is engineered for a minimum of 2.5 million actuations. It can be supplied with: two open or two gated limiters; a choice of circular convex or concave, castle or flat single-axis (Y) style caps; and fits a standard 12.6mm panel cut-out with the option of a control-grip mount.

Specifications include: 5V rating; pre-wired JST 28AWG cable or potted terminations; -40 to 85°C operating temperature range; and compliance with EN61000 electromagnetic compatibility and SAE J1455 vibration and shock testing standards.

www.liveelectronics.co.uk

Reliable transmission at very low temperatures

Intelliconnect has introduced the CryoCoax Q-CON high density cryogenic connector. CryoCoax, a division of Intelliconnect, has developed high-density multiway connectors based around the SMPM interface which provides more coaxial lines in a given space and simplifies installation and customisation within a dilution refrigerator.

Typical spacing using SMA connectors is limited to approximately 16mm, while the new Q-CON high-density connectors offer a 4.75mm pitch. The SMPM interface provides a simple push-to-mate connection, only requiring a hex key to tighten the two fasteners.

The connector components are machined from high purity copper and beryllium copper, gold plated to provide best thermal conductivity. Non-magnetic versions can also be specified. The connectors are compatible with .047in (1.19mm) size coax, with semi-rigid, flexible or conformable versions available.

Semi-rigid cables are available in niobium titanium, stainless steel, copper, cupronickel and beryllium copper–plus combinations–with silver plated conductors, providing users with a large choice of thermal conductivity and attenuation.

www.intelliconnectgroup.com

Manufacturer	Distributor	Telephone	Website	Franchised Distributor	No. of Lines for Principal	Stock Value for Principal	Minimum Order Value	% Lead Free for Principal Range	No. of Technical Support Staff	Total No. of Staff	Buffer Stock Facility
CABLE ASSEMBLY & HARNESSING											
Amphenol	Mouser Electronics	01494-427500	www.mouser.co.uk	Y	3,000	N/A	0 €	N/A	50	2,500+	Y
FTDI	Mouser Electronics	01494-427500	www.mouser.co.uk	Y	50	N/A	0 €	N/A	50	2,500+	Y
Harwin	Mouser Electronics	01494-427500	www.mouser.co.uk	Y	600	N/A	0 €	N/A	50	2,500+	Y
Molex	Mouser Electronics	01494-427500	www.mouser.co.uk	Y	2,550	N/A	0 €	N/A	50	2,500+	Y
Phoenix Contact	Mouser Electronics	01494-427500	www.mouser.co.uk	Y	2,200	N/A	0 €	N/A	50	2,500+	Y
CIRCUIT PROTECTION											
Bourns	Mouser Electronics	01494-427500	www.mouser.co.uk	Y	2,800	N/A	0 €	N/A	50	2,500+	Y
EPCOS/TDK	Mouser Electronics	01494-427500	www.mouser.co.uk	Y	1,950	N/A	0 €	N/A	50	2,500+	Y
Littelfuse	Mouser Electronics	01494-427500	www.mouser.co.uk	Y	11,450	N/A	0 €	N/A	50	2,500+	Y
Vishay	Mouser Electronics	01494-427500	www.mouser.co.uk	Y	3,150	N/A	0 €	N/A	50	2,500+	Y
DISPLAYS											
Midas Displays		01493 602602	www.midasdisplays.com	N	3,300	N/A	£0	100%	10	17+	Y
ENCLOSURES											
Bud Industries	Mouser Electronics	01494-427500	www.mouser.co.uk	Y	1,600	N/A	0 €	N/A	50	2,500+	Y
CamdenBoss	CamdenBoss	01638-716101	www.camdenboss.com	N	1,199	N/A	£0	N/A	10	106	Y
Hammond	Switch Electronics	01482-862255	switchelectronics.co.uk	Y	500	N/A	£0	70%	2	6	Y
Hammond	Mouser Electronics	01494-427500	www.mouser.co.uk	Y	3,350	N/A	0 €	N/A	50	2,500+	Y
Metcase Enclosures	OKW Enclosures	01489-583858	www.metcase.co.uk	N	288	£40,000	£0	N/A	5	22	Y
New Age Enclosures	Mouser Electronics	01494-427500	www.mouser.co.uk	Y	150	N/A	0 €	N/A	50	2,500+	Y
OKW Enclosures Ltd	OKW Enclosures	01489 583858	www.okw.co.uk	N	1,955	£40,000	£0	N/A	5	22	Y
Phoenix Mecano Ltd	BOPLA Enclosures & Accessories	01296 611660	www.bopla-enclosures.co.uk	Y	150	N/A	£0	N/A	3	2,000+	Y
Rolec Enclosures	OKW Enclosures	01489 583858	www.rolec-enclosures.co.uk	Y	935	£40,000	£0	N/A	5	22	Y
Teko Enclosures	OKW Enclosures	01489 583858	www.teko.co.uk	Y	1,860	£40,000	£0	N/A	5	22	Y
FREQUENCY MANAGEMENT											
ABRACON	Mouser Electronics	01494-427500	www.mouser.co.uk	Y	2,750	N/A	0 €	N/A	50	2,500+	Y
Analog Devices Inc.	Mouser Electronics	01494-427500	www.mouser.co.uk	Y	150	N/A	0 €	N/A	50	2,500+	Y

Services Sourcing

CEM

DEVICE PROGRAMMING

TAPE REELING

INTERCONNECTION

Manufacturer	Distributor	Telephone	Website	Franchised Distributor	No. of Lines for Principal	Stock Value for Principal	Minimum Order Value	% Lead Free for Principal Range	No. of Technical Support Staff	Total No. of Staff	Buffer Stock Facility
ECS	Mouser Electronics	01494-427500	www.mouser.co.uk	Y	2,050	N/A	0 €	N/A	50	2,500+	Y
Epson	Mouser Electronics	01494-427500	www.mouser.co.uk	Y	900	N/A	0 €	N/A	50	2,500+	Y
Golledge Electronics Ltd	Golledge Electronics Ltd	01460 256 100	www.golledge.com	N	N/A	£800,000	£0	100%	12	24	Y
IQD Frequency Products	Mouser Electronics	01494-427500	www.mouser.co.uk	Y	1,500	N/A	0 €	N/A	50	2,500+	Y
Jauch Quartz	Digi-Key Electronics	0800 587 0991	www.digikey.co.uk	Y	500	£250,000	0	100%	15	130	Y
Kyocera	Mouser Electronics	01494-427500	www.mouser.co.uk	Y	950	N/A	0 €	N/A	50	2,500+	Y
Microchip	Mouser Electronics	01494-427500	www.mouser.co.uk	Y	1,450	N/A	0 €	N/A	50	2,500+	Y
Murata	Mouser Electronics	01494-427500	www.mouser.co.uk	Y	550	N/A	0 €	N/A	50	2,500+	Y
Silicon Laboratories	Mouser Electronics	01494-427500	www.mouser.co.uk	Y	500	N/A	0 €	N/A	50	2,500+	Y
TXC Corporation	Mouser Electronics	01494-427500	www.mouser.co.uk	Y	500	N/A	0 €	N/A	50	2,500+	Y
HEATSINKS											
Aavid	Mouser Electronics	01494-427500	www.mouser.co.uk	Y	200	N/A	0 €	N/A	50	2,500+	Y
ICs & SEMICONDUCTORS											
Alliance Memory	Mouser Electronics	01494-427500	www.mouser.co.uk	Y	500	N/A	0 €	N/A	50	2,500+	Y
Analog Devices Inc	Mouser Electronics	01494-427500	www.mouser.co.uk	Y	18,700	N/A	0 €	N/A	50	2,500+	Y
Broadcom Limited	Mouser Electronics	01494-427500	www.mouser.co.uk	Y	200	N/A	0 €	N/A	50	2,500+	Y
Central Semiconductor	Mouser Electronics	01494-427500	www.mouser.co.uk	Y	1,250	N/A	0 €	N/A	50	2,500+	Y
Cirrus Logic	Mouser Electronics	01494-427500	www.mouser.co.uk	Y	200	N/A	0 €	N/A	50	2,500+	Y
Cree, Inc	Mouser Electronics	01494-427500	www.mouser.co.uk	Y	200	N/A	0 €	N/A	50	2,500+	Y
Diodes Incorporated	Mouser Electronics	01494-427500	www.mouser.co.uk	Y	8,200	N/A	0 €	N/A	50	2,500+	Y
FTDI	Mouser Electronics	01494-427500	www.mouser.co.uk	Y	100	N/A	0 €	N/A	50	2,500+	Y
Infineon	Mouser Electronics	01494-427500	www.mouser.co.uk	Y	8,300	N/A	0 €	N/A	50	2,500+	Y
Intel	Mouser Electronics	01494-427500	www.mouser.co.uk	Y	1,750	N/A	0 €	N/A	50	2,500+	Y
Maxim Integrated	Mouser Electronics	01494-427500	www.mouser.co.uk	Y	14,050	N/A	0 €	N/A	50	2,500+	Y
Microchip	Mouser Electronics	01494-427500	www.mouser.co.uk	Y	24,200	N/A	0 €	N/A	50	2,500+	Y
Micron Technology	Mouser Electronics	01494-427500	www.mouser.co.uk	Y	600	N/A	0 €	N/A	50	2,500+	Y
Monolithic Power Systems (MPS)	Mouser Electronics	01494-427500	www.mouser.co.uk	Y	850	N/A	0 €	N/A	50	2,500+	Y
Nexperia	Mouser Electronics	01494-427500	www.mouser.co.uk	Y	7,600	N/A	0 €	N/A	50	2,500+	Y
Nordic Semiconductor	Mouser Electronics	01494-427500	www.mouser.co.uk	Y	60	N/A	0 €	N/A	50	2,500+	Y
NXP	Mouser Electronics	01494-427500	www.mouser.co.uk	Y	4,700	N/A	0 €	N/A	50	2,500+	Y
ON Semiconductor	Mouser Electronics	01494-427500	www.mouser.co.uk	Y	18,700	N/A	0 €	N/A	50	2,500+	Y
Power Integrations	Mouser Electronics	01494-427500	www.mouser.co.uk	Y	750	N/A	0 €	N/A	50	2,500+	Y
Qorvo	Mouser Electronics	01494-427500	www.mouser.co.uk	Y	700	N/A	0 €	N/A	50	2,500+	Y
Renesas Electronics	Mouser Electronics	01494-427500	www.mouser.co.uk	Y	5,550	N/A	0 €	N/A	50	2,500+	Y
ROHM Semiconductor	Mouser Electronics	01494-427500	www.mouser.co.uk	Y	6,900	N/A	0 €	N/A	50	2,500+	Y
Semtech	Mouser Electronics	01494-427500	www.mouser.co.uk	Y	350	N/A	0 €	N/A	50	2,500+	Y
Silicon Laboratories	Mouser Electronics	01494-427500	www.mouser.co.uk	Y	2,200	N/A	0 €	N/A	50	2,500+	Y
Skyworks	Mouser Electronics	01494-427500	www.mouser.co.uk	Y	550	N/A	0 €	N/A	50	2,500+	Y
STMicroelectronics	Mouser Electronics	01494-427500	www.mouser.co.uk	Y	10,050	N/A	0 €	N/A	50	2,500+	Y
Texas Instruments	Mouser Electronics	01494-427500	www.mouser.co.uk	Y	39,050	N/A	0 €	N/A	50	2,500+	Y
Toshiba	Mouser Electronics	01494-427500	www.mouser.co.uk	Y	2,050	N/A	0 €	N/A	50	2,500+	Y
Vishay	Mouser Electronics	01494-427500	www.mouser.co.uk	Y	10,850	N/A	0 €	N/A	50	2,500+	Y
Xilinx	Mouser Electronics	01494-427500	www.mouser.co.uk	Y	1,900	N/A	0 €	N/A	50	2,500+	Y
INTERCONNECTION											
3M	Mouser Electronics	01494-427500	www.mouser.co.uk	Y	2,750	N/A	0 €	N/A	50	2,500+	Y
Amphenol	Mouser Electronics	01494-427500	www.mouser.co.uk	Y	33,200	N/A	0 €	N/A	50	2,500+	Y
Cinch Connectivity Solutions	Mouser Electronics	01494-427500	www.mouser.co.uk	Y	4,250	N/A	0 €	N/A	50	2,500+	Y
FCI / Amphenol	Mouser Electronics	01494-427500	www.mouser.co.uk	Y	7,850	N/A	0 €	N/A	50	2,500+	Y
HARTING	Mouser Electronics	01494-427500	www.mouser.co.uk	Y	6,800	N/A	0 €	N/A	50	2,500+	Y
Harwin	Mouser Electronics	01494-427500	www.mouser.co.uk	Y	2,950	N/A	0 €	N/A	50	2,500+	Y
Hirose Electric	Mouser Electronics	01494-427500	www.mouser.co.uk	Y	7,850	N/A	0 €	N/A	50	2,500+	Y
Intelliconnect (Europe) Ltd		01245 347145	www.intelliconnect.co.uk	N/A	N/A	N/A	N/A	100%	5	30	
JAE Electronics	Mouser Electronics	01494-427500	www.mouser.co.uk	Y	1,450	N/A	0 €	N/A	50	2,500+	Y
Molex	Mouser Electronics	01494-427500	www.mouser.co.uk	Y	23,600	N/A	0 €	N/A	50	2,500+	Y
Phoenix Contact	Mouser Electronics	01494-427500	www.mouser.co.uk	Y	17,150	N/A	0 €	N/A	50	2,500+	Y
Radiall	Mouser Electronics	01494-427500	www.mouser.co.uk	Y	2,350	N/A	0 €	N/A	50	2,500+	Y
Samtec	Mouser Electronics	01494-427500	www.mouser.co.uk	Y	16,300	N/A	0 €	N/A	50	2,500+	Y
Souriau	Mouser Electronics	01494-427500	www.mouser.co.uk	Y	3,300	N/A	0 €	N/A	50	2,500+	Y

Manufacturer	Distributor	Telephone	Website	Franchised Distributor	No. of Lines for Principal	Stock Value for Principal	Minimum Order Value	% Lead Free for Principal Range	No. of Technical Support Staff	Total No. of Staff	Buffer Stock Facility
TE Connectivity	Mouser Electronics	01494-427500	www.mouser.co.uk	Y	41,850	N/A	0 €	N/A	50	2,500+	Y
Wurth Elektronik	Mouser Electronics	01494-427500	www.mouser.co.uk	Y	1,650	N/A	0 €	N/A	50	2,500+	Y
OBSOLESCENCE / HARD TO FIND											
Rochester Electronics	Rochester Electronics	+44.1480.408400	www.rocelec.com	Y	299	N/A	$250	N/A	10	400+	Y
OPTO ELECTRONICS											
Broadcom Limited	Mouser Electronics	01494-427500	www.mouser.co.uk	Y	2,300	N/A	0 €	N/A	50	2,500+	Y
Cree, Inc.	Mouser Electronics	01494-427500	www.mouser.co.uk	Y	3,800	N/A	0 €	N/A	50	2,500+	Y
Intel	Mouser Electronics	01494-427500	www.mouser.co.uk	Y	20	N/A	0 €	N/A	50	2,500+	Y
Osram Opto Semiconductor	Mouser Electronics	01494-427500	www.mouser.co.uk	Y	1,300	N/A	0 €	N/A	50	2,500+	Y
Toshiba	Mouser Electronics	01494-427500	www.mouser.co.uk	Y	450	N/A	0 €	N/A	50	2,500+	Y
Vishay	Mouser Electronics	01494-427500	www.mouser.co.uk	Y	2,350	N/A	0 €	N/A	50	2,500+	Y
PASSIVES											
AVX	Mouser Electronics	01494-427500	www.mouser.co.uk	Y	17850	N/A	0 €	N/A	50	2,500+	Y
Bourns	Mouser Electronics	01494-427500	www.mouser.co.uk	Y	15,100	N/A	0 €	N/A	50	2,500+	Y
Coilcraft	Mouser Electronics	01494-427500	www.mouser.co.uk	Y	5,750	N/A	0 €	N/A	50	2,500+	Y
EPCOS / TDK	Mouser Electronics	01494-427500	www.mouser.co.uk	Y	5,450	N/A	0 €	N/A	50	2,500+	Y
KEMET	Mouser Electronics	01494-427500	www.mouser.co.uk	Y	23,650	N/A	0 €	N/A	50	2,500+	Y
Murata	Mouser Electronics	01494-427500	www.mouser.co.uk	Y	18700	N/A	0 €	N/A	50	2,500+	Y
Ohmite	Mouser Electronics	01494-427500	www.mouser.co.uk	Y	6,550	N/A	0 €	N/A	50	2,500+	Y
Panasonic	Mouser Electronics	01494-427500	www.mouser.co.uk	Y	25,450	N/A	0 €	N/A	50	2,500+	Y
Taiyo Yuden	Mouser Electronics	01494-427500	www.mouser.co.uk	Y	5,100	N/A	0 €	N/A	50	2,500+	Y
TDK	Mouser Electronics	01494-427500	www.mouser.co.uk	Y	13,050	N/A	0 €	N/A	50	2,500+	Y
TE Connectivity	Mouser Electronics	01494-427500	www.mouser.co.uk	Y	11,500	N/A	0 €	N/A	50	2,500+	Y
TT Electronics	Mouser Electronics	01494-427500	www.mouser.co.uk	Y	5,050	N/A	0 €	N/A	50	2,500+	Y
Vishay	Mouser Electronics	01494-427500	www.mouser.co.uk	Y	43850	N/A	0 €	N/A	50	2,500+	Y
Wurth Elektronik	Mouser Electronics	01494-427500	www.mouser.co.uk	Y	6,750	N/A	0 €	N/A	50	2,500+	Y
Yageo	Mouser Electronics	01494-427500	www.mouser.co.uk	Y	21,450	N/A	0 €	N/A	50	2,500+	Y
POWER & BATTERIES											
FRIWO Gerätebau GmbH	Haredata Electronics	01423 796240	www.haredata.co.uk	Y	250 - 500	€1M	£250	100%	7	14	Y
Jauch Quartz		01276 605900	www.jauch.com			£500,000	0	95	15	130	Y
Mean Well	Ecopac (UK) Power Ltd	01844 204420	www.ecopacpower.co.uk	Y	6,000	£2M	£0	100%	8	30	Y
Bel Power Solutions	Mouser Electronics	01494-427500	www.mouser.co.uk	Y	600	N/A	0 €	N/A	50	2,500+	Y
CUI Inc	Mouser Electronics	01494-427500	www.mouser.co.uk	Y	2,200	N/A	0 €	N/A	50	2,500+	Y
MEAN WELL	Mouser Electronics	01494-427500	www.mouser.co.uk	Y	4,400	N/A	0 €	N/A	50	2,500+	Y
Murata	Mouser Electronics	01494-427500	www.mouser.co.uk	Y	1500	N/A	0 €	N/A	50	2,500+	Y
RECOM	Mouser Electronics	01494-427500	www.mouser.co.uk	Y	3,150	N/A	0 €	N/A	50	2,500+	Y
TDK-Lambda	Mouser Electronics	01494-427500	www.mouser.co.uk	Y	1,900	N/A	0 €	N/A	50	2,500+	Y
TRACO Power	Mouser Electronics	01494-427500	www.mouser.co.uk	Y	4,000	N/A	0 €	N/A	50	2,500+	Y
Vicor	Mouser Electronics	01494-427500	www.mouser.co.uk	Y	2,300	N/A	0 €	N/A	50	2,500+	Y
XP Power	Mouser Electronics	01494-427500	www.mouser.co.uk	Y	2,200	N/A	0 €	N/A	50	2,500+	Y
SENSORS											
ams	Mouser Electronics	01494-427500	www.mouser.co.uk	Y	150	N/A	0 €	N/A	50	2,500+	Y
Analog Devices Inc	Mouser Electronics	01494-427500	www.mouser.co.uk	Y	300	N/A	0 €	N/A	50	2,500+	Y
Bosch	Mouser Electronics	01494-427500	www.mouser.co.uk	Y	25	N/A	0 €	N/A	50	2,500+	Y
Honeywell	Mouser Electronics	01494-427500	www.mouser.co.uk	Y	2,200	N/A	0 €	N/A	50	2,500+	Y
Maxim Integrated	Mouser Electronics	01494-427500	www.mouser.co.uk	Y	350	N/A	0 €	N/A	50	2,500+	Y
NXP	Mouser Electronics	01494-427500	www.mouser.co.uk	Y	300	N/A	0 €	N/A	50	2,500+	Y
Sensirion	Mouser Electronics	01494-427500	www.mouser.co.uk	Y	80	N/A	0 €	N/A	50	2,500+	Y
STMicroelectronics	Mouser Electronics	01494-427500	www.mouser.co.uk	Y	75	N/A	0 €	N/A	50	2,500+	Y
TE Connectivity	Mouser Electronics	01494-427500	www.mouser.co.uk	Y	650	N/A	0 €	N/A	50	2,500+	Y
Texas Instruments	Mouser Electronics	01494-427500	www.mouser.co.uk	Y	850	N/A	0 €	N/A	50	2,500+	Y
SWITCHES & KEYBOARDS											
Apem	Mouser Electronics	01494-427500	www.mouser.co.uk	Y	2,850	N/A	0 €	N/A	50	2,500+	Y
C&K Switches	Mouser Electronics	01494-427500	www.mouser.co.uk	Y	5,550	N/A	0 €	N/A	50	2,500+	Y
E-Switch	Mouser Electronics	01494-427500	www.mouser.co.uk	Y	2,350	N/A	0 €	N/A	50	2,500+	Y
EAO	Mouser Electronics	01494-427500	www.mouser.co.uk	Y	1,800	N/A	0 €	N/A	50	2,500+	Y
Honeywell	Mouser Electronics	01494-427500	www.mouser.co.uk	Y	4,700	N/A	0 €	N/A	50	2,500+	Y

Manufacturer	Distributor	Telephone	Website	Franchised Distributor	No. of Lines for Principal	Stock Value for Principal	Minimum Order Value	% Lead Free for Principal Range	No. of Technical Support Staff	Total No. of Staff	Buffer Stock Facility
NKK Switches	Mouser Electronics	01494-427500	www.mouser.co.uk	Y	4,000	N/A	0 €	N/A	50	2,500+	Y
Omron	Mouser Electronics	01494-427500	www.mouser.co.uk	Y	4,700	N/A	0 €	N/A	50	2,500+	Y
Panasonic	Mouser Electronics	01494-427500	www.mouser.co.uk	Y	550	N/A	0 €	N/A	50	2,500+	Y
TE Connectivity	Mouser Electronics	01494-427500	www.mouser.co.uk	Y	1,350	N/A	0 €	N/A	50	2,500+	Y
TERMINAL BLOCKS											
CamdenBoss	CamdenBoss	01638-716101	www.camdenboss.com	N	930	N/A	£0	N/A	10	106	Y
Marathon Special Products	Global Supply Services	01904 436 488	www.global-supply-services.com	Y	8,000	£800,000	£100	100%	3	11	Y
Molex	Mouser Electronics	01494-427500	www.mouser.co.uk	Y	1,850	N/A	0 €	N/A	50	2,500+	Y
Phoenix Contact	Mouser Electronics	01494-427500	www.mouser.co.uk	Y	13,550	N/A	0 €	N/A	50	2,500+	Y
TE Connectivity	Mouser Electronics	01494-427500	www.mouser.co.uk	Y	1,750	N/A	0 €	N/A	50	2,500+	Y
THERMAL MANAGEMENT											
Bergquist Company	Mouser Electronics	01494-427500	www.mouser.co.uk	Y	250	N/A	0 €	N/A	50	2,500+	Y
Delta Electronics	Mouser Electronics	01494-427500	www.mouser.co.uk	Y	700	N/A	0 €	N/A	50	2,500+	Y
ebm-papst	Mouser Electronics	01494-427500	www.mouser.co.uk	Y	1,450	N/A	0 €	N/A	50	2,500+	Y
EMI Thermal	EMI Thermal	01992 510000	www.emithermal.com	N	800	N/A	£20	100%	12	200	Y
Multiple Manufacturers	Materials Direct	+44 (0)1908 222 211	www.materials-direct.com	N/A	N/A	£1,000,000+	£0	N/A	5	55	Y
Sanyo Denki	Mouser Electronics	01494-427500	www.mouser.co.uk	Y	1,450	N/A	0 €	N/A	50	2,500+	Y
Sunon	G.English Electronics Ltd	0208 855 0991	www.gelec.co.uk	Y	3,500	£1,000,000+	£0	100%	10	28	Y
Sunon	Thermaco Ltd	01684 566163	www.thermaco.co.uk	Y	3,500	£450,000	£100	100%	7	15	Y
Universal Science	Universal Science	+44 (0)1908 222 211	www.universal-science.com	N/A	N/A	£1,000,000	£0	N/A	5	55	Y
TRANSFORMERS & INDUCTORS											
Best Windings	Best Windings	0044 (0)1394 448424	www.bestwindings.co.uk	N	300	N/A	£100	N/A	2	24	Y
Bourns	Mouser Electronics	01494-427500	www.mouser.co.uk	Y	4,900	N/A	0 €	N/A	50	2,500+	Y
Coilcraft	Mouser Electronics	01494-427500	www.mouser.co.uk	Y	5,500	N/A	0 €	N/A	50	2,500+	Y
EPCOS / TDK	Mouser Electronics	01494-427500	www.mouser.co.uk	Y	1,300	N/A	0 €	N/A	50	2,500+	Y
Murata	Mouser Electronics	01494-427500	www.mouser.co.uk	Y	6,900	N/A	0 €	N/A	50	2,500+	Y
TDK	Mouser Electronics	01494-427500	www.mouser.co.uk	Y	4,050	N/A	0 €	N/A	50	2,500+	Y
Vishay	Mouser Electronics	01494-427500	www.mouser.co.uk	Y	1,200	N/A	0 €	N/A	50	2,500+	Y
Wurth Elektronik	Mouser Electronics	01494-427500	www.mouser.co.uk	Y	3,400	N/A	0 €	N/A	50	2,500+	Y
WIRELESS SOLUTIONS											
DIGI	Mouser Electronics	01494-427500	www.mouser.co.uk	Y	200	N/A	0 €	N/A	50	2,500+	Y
Espressif	Mouser Electronics	01494-427500	www.mouser.co.uk	Y	30	N/A	0 €	N/A	50	2,500+	Y
Laird Connectivity	Mouser Electronics	01494-427500	www.mouser.co.uk	Y	100	N/A	0 €	N/A	50	2,500+	Y
Lantronix	Mouser Electronics	01494-427500	www.mouser.co.uk	Y	25	N/A	0 €	N/A	50	2,500+	Y
Microchip	Mouser Electronics	01494-427500	www.mouser.co.uk	Y	150	N/A	0 €	N/A	50	2,500+	Y
Murata	Mouser Electronics	01494-427500	www.mouser.co.uk	Y	30	N/A	0 €	N/A	50	2,500+	Y
Silicon Laboratories	Mouser Electronics	01494-427500	www.mouser.co.uk	Y	150	N/A	0 €	N/A	50	2,500+	Y
Texas Instruments	Mouser Electronics	01494-427500	www.mouser.co.uk	Y	20	N/A	0 €	N/A	50	2,500+	Y
u-blox	Mouser Electronics	01494-427500	www.mouser.co.uk	Y	10	N/A	0 €	N/A	50	2,500+	Y

Contract Manufacturers Buyers' Guide

Manufacturer	Telephone	Website	Turnover	Location	Employees	Number of Surface Mount Lines	Approvals	BGA Capacity	Lead Free Manufacturer	Prototyping	Design Capability	Full Turnkey	Cables and Harnessing
Alan Anderson Manufacturing Ltd	+44 (0) 333 322 7222	www.aa-manufacturing.co.uk	£21m	Hertfordshire UK	40	2	ISO9001:2015 , IPC-A-610	Y	Y	Y	Y	Y	Y
Challenger Solutions Ltd	01245 325252	www.challengersolutions.com	£14m	Essex/SE	85	12	AS9100 Rev D, ISO9001:2015, ISO 140001:2015, UL , CCC, IPC-610-G Class 3, TUV	Y	Y	Y	Y	Y	Y
CML Innovative Technologies (uk) Ltd	01284 714700	www.cml-it.com	£12M	UK/EU/China	65		ISO9001, TS16949, UL ISO9001 2015, IATF 16949 2016	N	Y	Y	Y	Y	Y
Corintech Ltd	+44 (0)1425 655655	www.corintech.com	£16.9m	UK & Far East	80	6	AS9100, ISO9001, IPC-A-610 Class 3, J-STD-001	Y	Y	Y	Y	Y	Y
Custom Interconnect Ltd	01264 321321	www.cil-uk.co.uk	£18.6m	Andover (Hampshire)	130	6	AS9100 ISO13485 ISO9001 IPC-A-610 Class 3	Y	Y	Y	Y	Y	Y
Electronic Technicians Ltd	01202 897722	www.etluk.co.uk	£3.7m	SE	50	2	AS9100, ISO9001, ISO14001, IPC610/620 Class 3	Y	Y	Y	Y	Y	Y
FermionX Ltd	+44(0)1903 524600	www.fermionx.com	£6.5m	Worthing, W. Sussex	56	3	ISO9001:2015, ISO4001:2015, IPC-A-610 Class 2& 3, IPC-J-STD-001	Y	Y	Y	Y	Y	Y
GSPK Design Ltd	01423 798254	www.gspkdesign.ltd.uk/	£1m	North Yorkshire, UK	12	2	ISO 13485:2016, ISO 9001:2015, GS ATEX 7422	Y	Y	Y	Y	Y	Y
Hallmark Electronics Ltd	01782 562255	www.hallmarkelectronics.com	£4.1m	Staffordshire	27	2	ISO9001:2015, IPC-A-610 to Class 3, UL	Y	Y	Y	Y	Y	Y
Incap Electronics UK Ltd	01782 753200	www.incapcorp.com	€169,8m	UK, Slovakia, Estonia & India	2,500	22	ISO9100, ISO14001, ISO13485, AS9100D, ISO45001 & IATF16949	Y	Y	Y	Y	Y	Y
Industrial Electonic Wiring Ltd	+44(0)1793 694033	www.iew.co.uk	£5.5m	Swindon, UK	60	N/A	ISO9001:2015, IPC610, IPC620	N	Y	Y	N	Y	Y
Jaltek	01582578170	jaltek.com	£15m	UK	105	3	AS9100, ISO9001, ISO13485, IPC-A-610 Class 3, Certified IPC Trainer (IPC-A-610, J-STD-001 & J-STD-001 Space Addendum)	Y	Y	Y	Y	Y	Y
Nano Electronic Services Ltd	01388 247152	www.nanoelectronicservices.com	£1M	County Durham	2	15	ISO13485, ISO9001:2015 & IPC610 to Class 3	Y	Y	Y	Y	Y	Y
Nemco Ltd	01438 346600	www.nemco.co.uk	£15.9m	SE	120	6	AS9100, ISO9001:2008, IPC610/620 to Class 3, ISO14001-2004, SC21	Y	Y	Y	Y	Y	Y
NOTE Group	01753 746700	www.note-uk.co.uk	£207m	UK/EU/China	1,200	20	IPC610 to Class 3, ISO9001:2015, 13485, 14001, 18001	Y	Y	Y	Y	Y	Y
M-TEK (Assembly) Ltd	01189 455377	www.mtek.co.uk	£2.4m	SE	30	4	IS9001,ISO14001, IPC-A-610 Class 3, IPC-7711/7721, WHMA-3620, Certified IPC Trainer	Y	Y	Y	Y	Y	Y
Pektron	01332 832424	www.pektron.com	£50m	E-Midlands	350	8	ISO9001, ISO14001, TS16949, BEAB, VCA, TUV, UL	Y	Y	Y	Y	Y	Y
Simtek EMS Ltd	01843 233120	www.simtekems.co.uk	£8.2m	SE	77	3	ISO9001:2008, ISO13485, IPC-A-610 Class 3 & IPC-7711	Y	Y	Y	Y	Y	Y
Texcel Technology Plc	+44(0)1322621700	www.texceltechnology.com	£18m	SE	131	7	ISO9001, ISO14001, IPC610 Class 3,	Y	Y	Y	Y	Y	Y
Tioga Limited	01332 360884	www.tioga.co.uk	£16m	Derby	130	6	ISO 9001, ISO 13485, ISO14001, IPC 610, 620, 7711/7721	Y	Y	Y	Y	Y	Y
Wilson Process Systems	01424 722222	www.wps.co.uk	£12m	SE	100	5	ISO9001:2015, IPC-A-610 Class 3	Y	Y	Y	Y	Y	Y

PCB Buyers' Guide

Manufacturer	Telephone	Website	Service Provided (i.e Broker, Manufacture &/or Repair)	Location	Approvals	Volume - Small, Medium, Large	Double-sided	Multi-layer 4-10/10-20-20-30	Metal PCBs	Ceramic PCBs	Heavy Copper PCBs	Flexi / Flexi-Rigid	Obsolescence Solutions	Modifications	Prototyping
Cambridge Circuit Company Ltd	01223 423100	www.cambridge-circuit.co.uk	M	SE	ISO9001:2015, UL, ISO 14001:2015	SML	Y	4-16	Y	N/A	N/A	Y	Y	Y	Y
DK-Daleba Printed Circuit Boards	01992 510000	www.dk-daleba.co.uk	M	UK, Europe, Asia	ISO 9001:2015, UL, TS16949, JOSCAR	SML	Y	4-58	Y	Y	Y	Y	Y	Y	Y
GSPK Circuits Ltd	+44 (0)1423 798 740	www.gspkcircuits.ltd.uk	M/R	UK, Europe, Asia	IS 9001:2015, IATF 16949:2016, EN (AS) 9100, Joscar	SML	Y	4-34	Y	Y	Y	Y	Y	Y	Y
Stevenage Circuits Ltd	01438 761811	www.stevenagecircuits.co.uk	M/B	UK/China	ISO 9001:2015, EN 9100:2018, EN 9104:2013, UL796, ISO 14001:2015	SML	Y	4-44+	Y	N/A	N/A	F, F/R	Y	Y	Y
Tate Circuit Industries Ltd	01543 622 435	www.tatecircuits.com	M/B	UK/China	ISO 9001:2015, UL	SML	Y	4-20	Y	N/A	N/A	Y	Y	Y	Y

Advert Index